FORMULA STUDENT UK 2027 RULES

INTRODUCTION 4

CONCEPT CLASS INTRODUCTION 6

CHANGELOG 7

ABBREVIATIONS 8

SECTION A – ADMINISTRATIVE REGULATIONS 9

A1 COMPETITION OVERVIEW 9

A2 VEHICLE ELIGIBILITY 11

A3 RULES OF CONDUCT 12

A4 GENERAL REQUIREMENTS FOR TEAMS & PARTICIPANTS 15

A5 DOCUMENTATION & DEADLINES 21

A6 GENERAL RULES 23

SECTION T – GENERAL TECHNICAL REQUIREMENTS 29

T1 DEFINITIONS 29

T2 GENERAL DESIGN REQUIREMENTS 30

T3 GENERAL CHASSIS DESIGN 31

T4 COCKPIT 34

T5 DRIVER RESTRAINT SYSTEM 35

T6 BRAKE SYSTEM 37

T7 POWERTRAIN 38

T8 AERODYNAMIC DEVICES 39

T9 COMPRESSED GAS SYSTEMS AND HIGH PRESSURE HYDRAULIC SYSTEMS 40

T10 FASTENERS 42

T11 ELECTRICAL COMPONENTS 43

T12 VEHICLE IDENTIFICATION 47

T13 VEHICLE AND DRIVER EQUIPMENT 49

T14 [DV ONLY] AUTONOMOUS SYSTEM 52

T15 [DV ONLY] AUTONOMOUS SYSTEM BRAKE 53

SECTION CV – INTERNAL COMBUSTION ENGINE VEHICLES 54

CV1 INTERNAL COMBUSTION ENGINE POWERTRAINS 54

CV2 FUEL AND FUEL SYSTEM 55

CV3 EXHAUST SYSTEM AND NOISE CONTROL 56

CV4 SHUTDOWN SYSTEM 57
CV5 LV HYBRID SYSTEM 58
SECTION EV – ELECTRIC VEHICLES 59
EV1 DEFINITIONS 59
EV2 ELECTRIC POWERTRAIN 60
EV3 GENERAL REQUIREMENTS 61
EV4 TRACTIVE SYSTEM 62
EV5 TRACTIVE SYSTEM ENERGY STORAGE 65
EV6 EV SHUTDOWN CIRCUIT AND SYSTEMS 68
EV7 CHARGERS 69
EV8 TRACTIVE SYSTEM ACCUMULATOR CONTAINER HAND CART 70
EV9 ELECTRICAL SYSTEM FORM 71
SECTION AFV – ALTERNATIVE FUEL VEHICLES 72
AFV1 ALTERNATIVE FUEL VEHICLES 72
SECTION IN – TECHNICAL INSPECTIONS 74
IN1 GENERAL 74
IN2 MOTORSPORT UK SAFETY INSPECTION 76
IN3 [EV ONLY] ACCUMULATOR INSPECTION 77
IN4 [EV ONLY] ELECTRICAL INSPECTION 78
IN5 MECHANICAL INSPECTION 79
IN6 [DV ONLY] AUTONOMOUS SYSTEM INSPECTION 80
IN7 TILT TEST 81
IN8 VEHICLE WEIGHING 82
IN9 [EV ONLY] RAIN TEST 83
IN10 NOISE TEST 84
IN11 BRAKE TEST 85
IN12 POST EVENT INSPECTION 86
IN13 DRIVER EGRESS TEST 87
SECTION S – STATIC EVENTS 88
S1 STATIC EVENT NO-SHOW PENALTY 88
S2 BUSINESS PLAN PRESENTATION (BPP) – FS CLASS AND CONCEPT CLASS 89
S3 COST AND MANUFACTURING EVENT – FORMULA STUDENT CLASS 92
S4 COST AND MANUFACTURING EVENT – CONCEPT CLASS 98

S5 ENGINEERING DESIGN EVENT – FORMULA STUDENT CLASS 100
S6 ENGINEERING DESIGN EVENT – CONCEPT CLASS 103
S7 LAP TIME SIMULATION (LTS) 104
SECTION D – DYNAMIC EVENTS 111
D1 DYNAMIC EVENTS GENERAL 111
D2 DRIVING RULES 112
D3 WEATHER CONDITIONS 115
D4 SKIDPAD EVENT 116
D5 ACCELERATION EVENT 119
D6 AUTOCROSS EVENT 122
D7 ENDURANCE AND EFFICIENCY EVENT 124
D8 [DV ONLY] TRACKDRIVE EVENT 130
D9 DYNAMIC EVENTS PENALTIES 132
SECTION FC – FUTURE CHANGES 134

INTRODUCTION

Formula Student UK (FS) is an educational challenge organised by the Institution of Mechanical Engineers (IMechE) for the purpose of educating and preparing students of engineering and other disciplines for their future careers.

The competition is governed and executed in line with four key values:

1. Safety – to maintain the highest standards of safety throughout the event.
2. Education – to focus on providing the best educational experience for all those involved, including competitors, volunteers and visitors.
3. Openness – to be open to collaboration with other competitions and parties, to embrace new ideas and to allow different vehicle concepts to compete together within a common rule set.
4. Inclusive – to deliver an event that allows all teams to be at their best: new or established, elite or amateur, domestic or international.

The IMechE is supported by volunteers from Industry and Academia that together form the Formula Student Organising Committee (the Committee). The Committee includes the IMechE Formula Student Project Manager and Project Executive and volunteers: Chairmen, Chief Judge, Clerk of the Course, Head Judges, Chief Scrutineers, Dynamic Events Captains and other volunteers representing key functional areas. The Committee is supported by sub-committees for Scrutineering, Dynamic Events, Electric Vehicles and FS-AI. The rule set for the competition is continuously reviewed by the Committee and updated at least once a year with the aim of providing the best educational experience for students and volunteers whilst maintaining the highest standards for safety.

Formula Student is held under the National Competition Rules of Motorsport UK (incorporating the provisions of the International Sporting Code of the FIA) and these Supplementary Regulations. The dynamic events are overseen by a licensed Clerk of the Course, supported by nationally registered marshals and officials as well as volunteers with industrial and/or Formula Student experience.

The static events are judged by a mix of experienced engineering industry professionals (from backgrounds including motorsport, automotive, aerospace and supply chain partners) as well as recent graduates and learned academic authorities.

The Competition is composed of three classes:

- Formula Student (FS Class),
- FS-AI (Formula Student Artificial Intelligence),
- Concept Class.

The Formula Student Rules consist of two documents:

- Formula Student 2027 Rules (this document),
- Formula Student AI 2027 Rules (driverless vehicle regulations).

The scope of Formula Student 2027 Rules covers FS Class, Concept Class and any FS-AI Class regulations that are common and integrated with FS Class (i.e., a single rule within a rules section, denoted by [DV Only]). All FS-AI specific rules sections are defined in the Formula Student AI 2027 Rules. Therefore, when understanding the regulations for FS-AI class, both rule sets must be considered.

These Formula Student UK 2027 Rules are written to be as closely aligned as is practicable with the 'Formula Student Rules 2027/FSG Rules', with specific targeted changes for the following reasons:

- Mitigation of safety risks based on experience from the UK events, partner events and Motorsport UK regulator,
- Relaxation of rules, in some but not all cases, which create a barrier to entry for FSAE based vehicles,
- UK specific administrative items required to meet the educational goals of the competition as defined by the IMechE and the Committee.

FS Class permits vehicles designed to Formula Student Rules 2027/FSG Rules and Formula SAE Rules (FSAE), but must conform to all relevant Formula Student Rules as defined above.

FS-AI rules (Driverless Vehicles) define the regulations for the two driverless classes, where teams use their own vehicle (Autonomous Driving System Class - ADS) or the IMechE ADS-DV (Autonomous Driving System – Dedicated Vehicle) is used (Dynamic Driving Task Class - DDT).

- ADS Class follows the administrative and technical regulation as defined in "Formula Student 2027 Rules" and the "Formula Student AI 2027 Rules" document, where the "Formula Student AI 2027 Rules" take precedent,
- For DDT class all technical, inspection, static and dynamic regulations are covered by the document "Formula Student AI 2027 Rules" in addition to some changes to the administrative regulations where the FS-AI rules take precedent.

The Formula Student AI 2027 Rules can be found on the Formula Student website.

CONCEPT CLASS INTRODUCTION

Teams may enter Concept Class, competing in static events only (Business Plan Presentation, Cost & Manufacturing, Engineering Design and Lap Time Simulation). Concept Class entries are assumed to be focused on ultimately providing an FS Class entry in a future competition year.

Formula Student allows combustion engine vehicles, electric vehicles and alternative fuelled vehicles; it is assumed that Concept Class entries pay full attention to this important FS specific design brief.

A key design choice for entrants is that of powertrain type. Teams must provide detailed understanding of this choice in their conceptual design decisions.

There are several documents required to be submitted prior the event: the documents are those required for FS Class with some exceptions related to the running vehicle. Key Dates for Concept Class submissions can be found on the Formula Student website.

The submissions required prior to the event are:

- Design Concept Specification,
- Engineering Design Report,
- Engineering Design Spec Sheet,
- LTS Input Deck,
- LTS Model Validation Test Plan,
- Business Plan Presentation slide deck,
- Cost Report Documents comprising,
    - BOM for Frame and Body only,
    - Cost Explanation File,
    - Supporting documents for Frame and Body only.

NOTE: The requirement for pre-judging submissions of individual Engineering Design Score Sheet Category presentations may be added. If required, teams will be informed via email and the Key Dates spreadsheet will be updated. We aim to inform teams of this requirement no later than April for a June submission deadline.

Penalties for lateness, non-submission, and poor-quality submission are as per FS Class.

CHANGELOG

Document	Version	Change
Formula Student 2027 Rules	V1.0	N/A – New Baseline Rules

Rule	Version	Change
T3.2	1.0	Aligned with FS Rules as advised in previous ruleset
T3.4	1.0	Aligned with FS Rules as advised in previous ruleset
T3.13	1.0	Removed requirement
T3.16.6	1.0	Smaller bolt equivalency alternative removed
T3.21.1	1.0	Relaxed requirement from “must” to “should”, requirement to prove equivalency to a double-lug or sleeved joint if making use of this relaxation.
T5.2.1	1.0	Supplementary rule removed as FSG has moved into alignment
T5.5.7	1.0	Supplementary rule removed as FSG has moved into alignment
T5.5.8	1.0	Supplementary rule removed as FSG has moved into alignment
T11.7.11	1.0	Fire port rules made less prescriptive to focus more on achieving the correct effect
T14.7	1.0	Supplementary rule removed as FSG has moved into alignment
T15.1.6	1.0	Supplementary rule removed as FSG has moved into alignment
EV5.3.9	1.0	Fire port rules made less prescriptive to focus more on achieving the correct effect
AFV1.3.2	1.0	Clarified that different types of gasoline or E85 to those provided by the organisers are not permitted.
IN13.2.8	1.0	Clarified that driver communication equipment must be present at egress in order to be used
S2.3	1.0	Removed requirement to provide an electronic copy of the BPP presentation or supporting documents
S3.2.5	1.0	Re-introduced the Real Case for FS class
S3.5.2	1.0	Changed CCBOM sections for 2027
S3.7.4	1.0	Added a page limit for the CEEF
S3.9.1	1.0	Scoring changed to reflect event restructuring
S7	1.0	Wording clarified and LTS Vehicle Evaluation Report added

ABBREVIATIONS

ADR	Autonomous Design Report
AFV	Alternative Fuel Vehicle
AIP	Anti-Intrusion Plate
AIR	Accumulator Isolation Relay
AMI	Autonomous Mission Indicator
AMS	Accumulator Management System
APPS	Accelerator Pedal Position Sensor
AS	Autonomous System
ASB	Autonomous System Brake
ASF	Autonomous System Form
ASMS	Autonomous System Master Switch
ASR	Autonomous System Responsible
ASRQ	ASR Qualification
ASSI	Autonomous System Status Indicator
BOM	Bill of Material
BOTS	Brake Over-Travel Switch
BPP	Business Plan Presentation Event
BPPV	Business Plan Pitch Video
BSPD	Brake System Plausibility Device
CCBOM	Costed Carbonised Bill of Material
CEEF	Cost and Emissions Explanation File
CRD	Cost Report Documents
CV	Internal Combustion Engine Vehicle
DC	Driverless Cup
DI	Direct Injection
DNA	Did Not Attempt
DNF	Did Not Finish
DOO	Down or Out
DQ	Disqualified
DSS	Design Spec Sheet
DV	Driverless
EAIR	ESF Add Item Request
EBS	Emergency Brake System
ECU	Electronic Control Unit
EDR	Engineering Design Report
EI	Flexural Rigidity
ESF	Electrical System Form
ESO	Electrical System Officer
ESOQ	Electrical System Officer Qualification
ETC	Electronic Throttle Control
EV	Electric Vehicle
FTO	Fuel Type Order
HPI	High Pressure Injection
HSC	Hybrid System Container
HSF	Hybrid System Form
HV	High Voltage
HVD	High Voltage Disconnect
IA	Impact Attenuator
IAD	Impact Attenuator Data
IMD	Insulation Monitoring Device
LPI	Low Pressure Injection
LV	Low Voltage
LVMS	Low Voltage Master Switch
LVS	Low Voltage System
MU	Magazine Uploads
OC	Off-course
OEM	Original Equipment Manufacturer
PCB	Printed Circuit Board
R2D	Ready-to-drive
RES	Remote Emergency System
RMS	Root Mean Square
SCS	System Critical Signal
SDC	Shutdown Circuit
SES	Structural Equivalency Spreadsheet
TMD	Team Member Designation
TPS	Throttle Position Sensor
TS	Tractive System
TSAC	Tractive System Accumulator Container
TSAL	Tractive System Active Light
TSMP	Tractive System Measuring Point
TSMS	Tractive System Master Switch
USS	Unsafe Stop

SECTION A – ADMINISTRATIVE REGULATIONS

A1 COMPETITION OVERVIEW

A1.1 Competition Objective

A1.1.1 The competition challenges teams of university students to conceive, design, fabricate, develop and compete with small, formula style, race cars. The envisaged "target customer" for these vehicles is an amateur (non-professional) driver.

A1.1.2 There are three entry classes: FS Class, FS-AI Class and Concept Class

A1.1.3 Entrants to Concept Class are to be designed based on being able to be manufactured and to then compete in FS Class in the immediate subsequent competition year.

A1.2 Competition Procedure

A1.2.1 The competition accepts entries for the following vehicle types:

- Internal Combustion Engine Vehicle (CV),
- Electric Vehicles (EV),
- Alternative Fuel Vehicles (AFV),
    - High Voltage Hybrid powertrains are permitted in this vehicle type.
- Driverless Vehicles (DV).

A1.2.2 All vehicles must meet the requirements defined in Section T and Section CV, EV or AFV, depending on their powertrain type.

A1.2.3 The competition starts with a series of technical inspections described in Section IN to check the vehicle for safety and compliance with the rules.

A1.2.4 The competition is divided into a series of static and dynamic events described in Sections S and D.

A1.2.5 The maximum achievable points for FS Class are listed in Table 1.

A1.2.6 The maximum achievable points for Concept Class are listed in Table 2.

A1.2.7 In either FS Class or FS-AI Class, if there are no finishers in any dynamic events, then no Overall Winner award will be given for that class.

A1.2.8 The CV, EV or AFV team with the most overall points will win the competition.

A1.2.9 The official language of the competition is English.

FS Class	Points
Static Events:	
Lap Time Simulation	20
Business Plan Presentation	115
Cost and Manufacturing	115
Engineering Design	150
Dynamic Events:	
Skid Pad	75
Acceleration	75
Autocross / Sprint	100
Efficiency	100
Endurance	250
Total Points	1000

Table 1: Maximum points awarded – FS Class

Concept Class	Points
Static Events:	
Lap Time Simulation	40
Business Plan Presentation	120
Cost and Manufacturing	150
Engineering Design	150
Total Points	460

Table 2: Maximum points awarded – Concept Class

A2 VEHICLE ELIGIBILITY

A2.1 Student Competition

A2.1.1 Vehicles entering the competition must be conceived, designed and maintained by the student team members without direct involvement from professional engineers, racers, machinists or related professionals.

A2.1.2 The student team may use any information from professionals or from academics, provided this information is given as a discussion of alternatives with their pros and cons.

A2.1.3 Professionals may not make design decisions or drawings.

A2.1.4 Students should manufacture and assemble as much of the vehicle as possible.

A2.2 First Year Vehicles

A2.2.1 A vehicle must only compete for one competition year, it's "first year", counting from the first day onsite at its first competition. Such a vehicle is defined as "new". A vehicle may not compete in Formula Student class of the same event (e.g. Formula Student UK FS Class) in the following season, even if two events occur within a one-year period.

A2.2.2 A team may attend a competition with their vehicle as a "non-competitor" if the team were registered for the Competition but have officially withdrawn prior to the event and have written permission from the Competition officials.

A "non-competitor"' cannot take part in any official or practice static or dynamic events. Practice scrutineering and technical rule clarifications are allowed, where time permits, priority will be given to registered entrants.

A2.2.3 To be classified as new, a vehicle must have a newly manufactured chassis, with significant changes in the Primary Structure to its predecessor.

[DV Only] Driverless Vehicles (DVs) may reuse a previous chassis from any year, but must be fully compliant with the current version of the rules. The Automated Driving System shall be developed for each new competition year.

A2.2.4 Teams may apply to reuse a previous year's chassis.

- Requests must be submitted via the Formula Student Question Database (FSQD) before the Structural Equivalency Spreadsheet (SES) deadline,
- Requests will be reviewed by the Chief Judge or Chief Technical Scrutineer, their decision will be final.
- If a team is permitted to reuse a previous year's chassis, this may attract penalty points for the Design Event.

A3 RULES OF CONDUCT

A3.1 General Officials Authority

A3.1.1 The officials reserve the right to revise the schedule, date and location of the competition and/or interpret or modify the competition rules at any time and in any manner that is, in their sole judgment, required for safe and efficient operation.

A3.1.2 All team members are required to cooperate with and follow all instructions from the officials.

A3.1.3 Official announcements shall be considered part of the rules.

A3.1.4 All guidelines and clarifications posted in the "Rules and Important Documents" sections on the competition website for the current season including the competition handbook are considered part of the rules. The "Key Dates" document is considered part of the Rules.

A3.2 Official Instructions

A3.2.1 Failure of a team member to follow an instruction or command directed specifically to that team or team member will result in 25 penalty points being deducted from the team's overall score.

A3.3 Arguments with Officials

A3.3.1 Argument with, or disobedience to, any official will result in the team being disqualified from the competition.

A3.4 Unsportsmanlike Conduct

A3.4.1 In the event of unsportsmanlike conduct, 25 penalty points will be deducted from the team's overall score. A second violation will result in the team being disqualified from the competition.

A3.5 Violations of Intent

A3.5.1 Violation of the intent of a rule will be considered a violation of the rule itself.

A3.5.2 Any parts, devices or software fragments designed with the intent to violate a rule, will be considered as a violation.

A3.5.3 While best efforts are made to prevent them, discrepancies between this rule set and other official documents may occur. In the event of this, this rule set will be considered as authoritative and prevail over other documentation.

A3.6 Questions about the Rules

A3.6.1 Questions about the rules may be asked to the officials.

A3.6.2 The frequently asked questions (FAQ) section on the competition website must be checked before submitting a question.

A3.6.3 The officials will only answer questions that are not already answered in the rules or FAQs or that require a new or novel interpretation.

A3.6.4 Questions must be submitted to the Formula Student Questions Database (FSQD) which can be accessed here: https://teams.formulastudent.com/FAQ/AskAQuestion

A3.6.5 Clarifications issued in response to questions about the rules may only be valid for one competition year. If you are submitting a question to reconfirm a previous clarification, the ID number of the original question should be referenced in the new question.

A3.6.6 Clarifications issued by other events may not be valid at Formula Student, if you are entering multiple events ensure you check the legality of your design with all event organisers.

A3.7 Protests

A3.7.1 If a team has a question about scoring, judging, policies or any official action it must be brought to the officials' attention within the announced protest period for an informal preliminary review before a protest can be filed.

A3.7.2 A team may protest any rule interpretation, score or official action which they feel has caused some actual, non-trivial, harm to their team, or has had a substantive effect on their score.

A3.7.3 All protests must be filed in writing and presented to the officials by the team leader. In order to have a protest considered, a team must post a 25-point protest bond which will be forfeited if their protest is rejected.

A3.7.4 Protests concerning any aspect of the competition must be filed within the protest period announced by the competition organisers in the Team Handbook, or within 30 minutes of the scores of the event to which the protest relates being posted. The formal procedure for posting of results will be described in the Team Handbook.

A3.7.5 The decision of the officials regarding any protest will be in written form and is final.

A3.8 Advertising Regulations

A3.8.1 To ensure full compliance with UK and European legislation, teams are not permitted to display any form of tobacco or cigarette advertising on their vehicles or display areas. The organisers also reserve the right to instruct teams to remove or cover any other vehicle or display area markings that may be illegal or likely to cause offence.

A3.9 Car Covering

A3.9.1 Covering or obscuring any competing car or any part of a competing car is considered unsportsmanlike conduct. Teams could receive a penalty of up to 50 points for car covering, at the discretion of the Chief Judge.

A3.9.2 During the entire Competition, except as permitted below, no screen, cover or other obstruction which in any way obscures any part of a car will be allowed at any time in the paddock, garages, pit lane or grid. The following are permitted:

- A cover over the car in the garage or paddock overnight,
- A cover over the car in the pit lane or on the grid if it is raining,
- Covers on the tyres to prevent debris pick-up,
- Covers over severely damaged cars or components.

A3.9.3 Any car part stored in front of the car will be considered as an obstruction unless it is stored flat on the ground and does not totally or partially hide the car. Anybody standing

in front of the car is considered as an obstruction to the visibility unless they must work on the car. A line of people in front of the car is strictly prohibited.

A4 GENERAL REQUIREMENTS FOR TEAMS & PARTICIPANTS

A4.1 Teams per University

A4.1.1 For FS Class and Concept Class a university may register two (2) teams for each class, if they are different power-train types (CV, EV or AFV).

For FS-AI Class a university may enter one (1) ADS and one (1) DDT entry.

A4.1.2 Notwithstanding A4.1.1, registration for Formula Student in the UK may be restricted to one (1) vehicle per class, per university, regardless of powertrain or vehicle type, depending on available space.

A4.1.3 Teams which are formed with members from two or more universities are treated as a single team.

A4.2 Team Members and Participants

A4.2.1 A team member may only be part of one team, work on one vehicle and take part in static and dynamic events for only one team. Any teams found to be in contravention of this rule may receive a 25 point penalty.

A4.2.2 Each team must have one team member identified as the Team Leader. The Team Leader is the main contact person for the officials during the registration process and the competition.

A4.2.3 Persons who have previously attended any official event as a judge are not allowed to participate as team members.

A4.2.4 Team members must be enrolled as degree seeking undergraduate or graduate students in any university. Team members who have graduated within the seven-month period prior to the competition remain eligible to participate.

A4.2.5 Students seeking a post graduate degree or equivalent are eligible to compete.

A4.2.6 Team members must be at least 18 years of age.

A4.2.7 Team members who will drive a competition vehicle at any time during the competition must hold a valid, government issued, photographic driver's licence for passenger cars, or a recognised National Sporting Authority (ASN) approved karting or car motorsport licence.

A4.2.8 Drivers who have driven for a professional racing team in a national or international series at any time may not drive in any competition event.

- A "professional racing team" is defined as a team that provides racing cars and enables drivers to compete in national or international racing series and employs staff in order to achieve this.

A4.2.9 Students studying at a UK university must be a member of the Institution of Mechanical Engineers to compete at Formula Student.

- International students with a 'home FS competition' may be a member of the engineering organisation that organises their home event (e.g. we will accept German students who are VDI members). If you do not have one of these home events in your country: SAE International, SAE Australasia, SAE Brazil, VDI, VDE, or ATA, your team

must become IMechE members.

- Student Affiliate membership is FREE to all Formula Student team members, regardless of discipline. To apply for Student Affiliate Membership:
  - Create or login to your Formula Student team account,
  - Select 'Student Affiliate Form' on the navigation bar,
  - Complete the application from and submit your application.
- Team Leaders must ensure that all team members become IMechE members as defined in the Key Dates Document which can be found at:

  https://www.imeche.org/events/formula-student/team-information/key-dates
- Membership numbers must be quoted in the Team Member Details section of your account prior to the event.
- Faculty Advisor membership of an engineering institution is optional.

A4.2.10 Students who became an IMechE affiliate member in a previous competition year do not need to apply again. They must inform membership@imeche.org that they are continuing to compete in Formula Student in this competition year and supply their name and membership number.

A4.3 [EV ONLY] Electrical System Officer

A4.3.1 Every participating team must appoint at least one Electrical System Officer (ESO) for the event. The ESO(s) is responsible for all electrical operations during the event.

A4.3.2 Where multiple ESOs are appointed, the team must clearly identify which ESO is responsible for which activities. Where responsibility is re-allocated, this must be done with the prior agreement of all ESOs involved.

A4.3.3 The ESO(s) is the only person in the team who may declare the vehicle electrically safe, in order for work to be performed on any system of the vehicle by the team.

A4.3.4 The ESO(s) must be valid team members, which means that they must have student status, see A4.2.4, A4.2.5 and A4.2.6.

A4.3.5 The ESO(s) must be contactable by phone at any time during the competition.

A4.3.6 An ESO must accompany the vehicle whenever it is operated or moved around the competition site.

A4.3.7 The ESO is not allowed to be a driver, unless a second ESO is named by the team who is not a driver. If the second ESO is also a driver then they cannot compete in the same dynamic event as the first driver, or a third ESO is required.

A4.3.8 The ESO must be certified or must have received appropriate practical training, whether formal or informal, for working with high voltage systems in automotive vehicles. Details of the training must be provided to the organizers on the ESO/ESA form for approval.

A4.4 [DV Only] Autonomous System Responsible

A4.4.1 To operate the AS every participating team must appoint at least one ASR for the competition. This person is responsible for all autonomous operations of the vehicle

during the competition, which includes any work on the autonomous system as well as racing and testing.

A4.4.2 For vehicles with an electric drivetrain the ASR(s) must fulfil A4.3 and therefore replace the ESO. The team may not register additional ESOs.

A4.4.3 The ASR(s) are the only persons in the team allowed to declare the autonomous system safe, so that work on any system of the vehicle may be performed by the team, or the vehicle may be operated in manual or autonomous mode.

A4.4.4 The ASR(s) must be a valid team member, which means that they must have student status, see A4.2.4, A4.2.5 and A4.2.6.

A4.4.5 The ASR(s) must accompany the vehicle whenever it is operated or moved around at the competition site.

A4.4.6 If only one ASR is named by the team, the ASR may not be a driver.

A4.4.7 The ASR(s) must be properly qualified to handle the autonomous system and to understand and deal with problems and failures. A bachelor's degree in computer science, electrical engineering, mechatronics, automation engineering, robotics or similar is a sufficient qualification.

A4.4.8 All ASRs are required to attend the team briefing as per the official Event Schedule for the live event.

A4.5 Faculty Advisor

A4.5.1 Each team must have a Faculty Advisor appointed by the university.

A4.5.2 The Faculty Advisor must accompany the team to the competition's live event and will be considered by competition officials to be the official representative of the university, with responsibility for the behaviour and conduct of all team members during the event.

The Faculty Advisor is expected to ensure that wherever possible the regulations and their university's Health and Safety protocols are followed at all times.

A4.5.3 If the Faculty Advisor is unable to accompany the team at any time during the event they must send a signed letter to the event officials, nominating who is responsible for the behaviour and conduct of all team members in their absence.

A4.5.4 Faculty Advisors may advise their teams on general engineering and engineering project management theory.

A4.5.5 Faculty Advisors may not design, build or repair any part of the competition vehicle or directly participate in the development of any documentation or presentation.

A4.6 [EV ONLY] Electrical System Advisor (ESA)

A4.6.1 The ESA must be a professionally competent person(s), nominated by the team, who can advise on the electrical and control systems that will be integrated into the vehicle. It is acceptable for the Faculty Advisor to be the ESA if all the requirements below are met.

A4.6.2 The ESA must supply details of their experience of electrical and/or control systems engineering as employed in the car on the ESO/ESA form for approval by the organisers. It is likely that the ESA will be a Chartered Engineer or someone of equivalent status.

A4.6.3 The ESA must have significant practical experience of the technology that is being developed and its implementation into vehicles or other safety critical systems such that they are adequately qualified to advise the team on their proposed electrical and control system designs. It may be necessary to have more than one ESA to achieve this requirement.

A4.6.4 The ESA must advise the team such that the merits of any relevant engineering solutions can be discussed, questioned and approved before being implemented into the final vehicle design.

A4.6.5 The ESA should advise the students on the required training so that they are competent to work with the systems on the vehicle.

A4.6.6 The ESA must review and sign the Electrical System Form to confirm that in principle the vehicle has been designed using good engineering practices.

A4.6.7 The ESA must ensure that the team discusses any unusual aspects of the design with the rules committee to reduce the risk of exclusion or significant changes being required to pass technical inspection.

A4.6.8 All EV team members are required to have basic electrical safety training to ensure they are aware of the risks and know how to respond in the event of an incident. Details of this training should be documented in the ESO/ESA form.

A4.7 Registration

A4.7.1 Registration for Formula Student must be completed online via the Competition website. Online registration must be performed by the Team Leader and official Faculty Advisor connected with the registering university.

A4.7.2 Registration for Formula Student UK is limited to a fixed number of competing cars. There is no limit to how many teams may be on the reserve list. A reserve team will be notified when a registration slot becomes available.

A4.7.3 Registration for Formula Student is via submission of a Design Concept Specification document by the date specified in the Key Dates document. There are no exceptions to this registration policy.

A4.7.4 Registration fees must be paid to the Institution of Mechanical Engineers by the deadline specified in the Key Dates document.

A4.7.5 In the event of a team withdrawing from the competition, registration fees are not refundable or transferable. In the event that the competition is cancelled entirely by the organisers, the option to defer entry fees to a future competition will be offered. Depending on the circumstances around the cancellation, a full or partial refund may be offered. Changes to the event schedule, dates or venue are pursuant to Rule A3.1.1.

A4.7.6 FS Class teams may request to change their entry to Concept Class prior to the deadline published in the Key Dates document. This will be subject to capacity in Concept Class.

A4.7.7 FS-AI ADS teams may request to change their entry to DDT prior to the deadline published in the Key Dates document. This will be subject to capacity in DDT class.

A4.8 Team Member Registration Requirements

A4.8.1 Team Leaders must ensure that every participant's name, including the Faculty Advisors, is listed in the Manage Members section of their Team Account. It is the Team Leader's responsibility to ensure that all team members have their own individual accounts. The following is also required:

- Driver's licence numbers must be listed for participants who intend to drive a competition vehicle.
- IMechE Membership Number (where required by A4.2.9)
- Emergency Contact Details for each team member and the Faculty Advisor must be submitted online by the deadline specified in the Key Dates document.

A4.8.2 Details of on-site registration requirements for the live event will be communicated via the Team Handbook, release date as per Key Dates document.

A4.9 Newcomer Registration

A4.9.1 Teams who will be competing in their first season of the FSAE/FS calendar with a running vehicle and have not won a major award at a previous competition, and teams that have been absent from FSAE/FS for at least 5 years will be eligible for the Newcomer Award.

Eligible teams should email fs@imeche.org to advise organisers of their Newcomer status.

A4.10 Competition Team Insurance

A4.10.1 All teams across all classes (Concept, FS, and FS-AI) are required to confirm that adequate insurance cover is in place, including, but not limited to, personal accident insurance for all drivers and Public Liability Insurance (minimum £15m) for the team. Team Leaders are responsible for submitting a copy of the team's insurance certificate via the competition website in accordance with the Key Dates document.

Declaration that cover is in place must be provided when a place in the competition is offered, accepted and payment is due. Teams will not be permitted to participate without this confirmation.

All participants who are not UK residents must provide proof of valid individual health insurance for the competition. This must be provided prior to attendance at any live event in accordance with the Key Dates document. Participants will not be accredited for any live events without evidence of cover.

A4.10.2 All participants must sign the Motorsport UK liability waiver. This must be completed by each participant via their team member account prior to attendance at any live event in accordance with the Key Dates document.

A4.10.3 All drivers participating in Formula Student 2026 are required to hold a valid Motorsport UK RS Clubman Licence. The licence is free of charge and details on how to apply can be found here: https://www.imeche.org/news/news-article/free-rs-clubman-licence-needed-for-formula-student-drivers

A4.11 Vehicle Shipping

A4.11.1 Vehicle shipments by commercial carrier must comply with the laws and regulations of nations from which, and to which, the car is being sent. Teams are advised to consult with their shipping company or freight forwarder to be sure their shipment fully complies with all relevant, customs, import/export and aviation shipping requirements.

A4.11.2 Shipments must be sent with the sending team or university listed as the receiving party. Neither the competition organisers nor the competition sites can be listed as the receiving party. The Institution of Mechanical Engineers will not take responsibility for any shipments or any associated charges. Further details on vehicle shipping can be found on the Formula Student website.

A5 DOCUMENTATION & DEADLINES

A5.1 Required Documents and Forms

A5.1.1 Several competition critical documents must be submitted prior to the competition live event. Full details of the document names, format, method of submission and deadlines can be found in the Key Dates document published on the Formula Student website.

NOTE: The Key Dates document is updated frequently so please check that you are working from the most up to date version as published on the website.

A5.1.2 Where applicable, templates for the required submissions can be found here:

https://www.imeche.org/events/formula-student/team-information/forms-and-documents

A5.1.3 Documents submitted in contradiction to the requirements set out in the Key Dates document, including blank document submissions, will be considered as "Not Submitted".

A5.2 Submission

A5.2.1 Uploaded documents can only be viewed by:

- Registered members on the team list of the university's Formula Student team account, including Team Leaders, Team Members and Faculty Advisors,
- Authorised Judges, Officials and Scrutineers,
- IMechE Staff.

A5.2.2 By submitting documents via the competition website, the team agrees that they may be reproduced and distributed by the officials, in both complete and edited versions, for educational purposes.

A5.2.3 Documents or videos that are largely incomplete or not readable/viewable will be considered as "Not Submitted".

A5.2.4 Team Leaders are responsible for ensuring that all their team's submissions are uploaded or sent no later than the published deadline. Account creation for online document submission is explained on the FS website.

A5.2.5 The format, method of submission, initial deadline and final deadline are all defined in the Key Dates document published here:

https://www.imeche.org/events/formula-student/team-information/key-dates

A5.2.6 SES and IAD submissions are reviewed in the order that they are received. Teams are strongly encouraged to submit these well before the submission deadline.

A5.2.7 All documents submitted online through your Team Account will generate a confirmation email stating the date and time of your upload. This will be sent to your primary team contact, as defined in your registration form.

- You are strongly advised to print and retain this confirmation email for the final version of each submission,
- If the primary contact email changes you must inform formulastudent@imeche.org.

A5.3 Late Submission or Non-Submission

A5.3.1 The penalties for submitting documents later than the initial and final deadlines are defined in the Key Dates document on the Formula Student website.

A5.3.2 Volunteer judges evaluate all the required submissions, it is essential that they have enough time to complete their work. There are no exceptions to the document submission deadlines and late submissions will incur penalties.

A5.3.3 Any penalty for late submission or non-submission of documents required for the Static Events will be deducted from the related event score, not the overall competition score.

A5.4 Correction Requests

A5.4.1 Judge / Official requested resubmissions to documents must be submitted no more than 14 days after the request is sent, as per the Key Dates document.

A5.4.2 Separate requests for different parts within one document or form will be treated independently.

A5.4.3 The document types that may be subject to resubmission requests by Judges / Officials are listed in the Key Dates document. Teams have the option to replace any uploaded documents with a new file at any time before the "Submission Deadline" or, where applicable the "Final Date for Late Submission" in the Key Dates document.

A5.4.4 Where applicable, between the "Submission Deadline" (document deadline before lateness applies) and the "Final Date for Late Submission" replacement documents are classified as late submissions and the appropriate lateness penalties will be applied, unless you were asked to resubmit by the Judge / Official reviewing your submission.

A5.4.5 Judges may request additional supporting documentation, such as Failure Mode and Effects Analysis (FMEA), to support document submissions.

A5.5 SES Approval

A5.5.1 SES for all vehicles (except DDT) must be submitted in line with the competition Key Dates document. All SES will be reviewed by Scrutineering and awarded a 'Approved or 'Failed' as part of pre-event checks. Teams who have received a 'Failed' result will be able to correct the SES and resubmit as many times as is needed prior to the resubmission deadline specified in the competition Key Dates document. Teams with not be able to pass scrutineering and dynamically compete without an approved SES.

A5.6 Design Concept Specification

A5.6.1 All teams must submit a Design Concept Specification (DCS) by way of application to compete in the 2027 competition. Submission of the DCS is via your Team Account as per the Key Dates document.

A6 GENERAL RULES

A6.1 Removing the Vehicle from the Site

A6.1.1 Teams who remove their vehicle ([EV ONLY] or tractive system accumulator) from the competition site after the competition has begun will be disqualified from the competition.

A6.2 Forfeit for Non-Appearance

A6.2.1 It is the responsibility of each team to be in the right place at the right time.

A6.2.2 If a team is not present and ready to compete at the scheduled time, they forfeit their attempt at that event.

A6.3 Team Briefing

A6.3.1 The team leader and all drivers for a particular day must attend the team briefing for that day as per the official Event Schedule for the live event.

A6.4 Testing and Work Safety

A6.4.1 Teams are reminded that cars built according to the Formula Student and Formula SAE rules are not designed or intended for racing or use at high speed, or in confined areas where they might impact with solid objects, including safety barriers.

Teams are advised to develop and run their vehicles on large, substantially open areas, and to do so only under similar speed and cornering conditions as they would face at official FSAE or FS events.

- It is further advised that all cars are checked by a Motorsport UK safety scrutineer. Please email fs@imeche.org to arrange this.

The competition officials disassociate themselves from all activities of the teams besides their own competition live event and associated events.

A6.4.2 All teams are advised to follow best engineering, manufacturing, machining and health and safety practices and common sense when working on the vehicle and when operating the vehicle, before, during and after a competition.

A6.4.3 The vehicles must not participate in events not suitable for this type of vehicle like hill climbs, drag races or similar.

A6.4.4 Teams must never use their vehicles for wheel-to-wheel races.

A6.4.5 The following listed requirements are considered the minimum for a testing/operating environment to qualify as safe. Following these guidelines does not guarantee safety under all circumstances:

- Driver wearing full protection gear according to T13.3,
- Working TSAL, IMD, AMS, ASSI, RES, EBS, APPS, accelerator/brake pedal plausibility check, and ETC plausibility check if applicable,
- Rules compliant chassis and mounted impact attenuator,
- No other passenger cars, trucks etc. being parked or driven on the same premises at the same time, unless the areas are clearly separated,

- No running under low visibility conditions,
- No running at speeds above typical event speeds,
- No running in areas where crashing into obstacles at the height of the driver's head is possible, such that parts of the vehicle may pass below an obstacle, but the driver's head can be trapped between the obstacle and the main hoop for example.

A6.4.6 The organisers hereby reserve the right to deduct points, or exclude individuals or teams from future competitions, if they act in such a way, at any time, as to actually or potentially bring the Formula Student name into disrepute.

Teams or individuals associated with them, displaying and/or running their vehicles at any events organised by themselves or others, who use the Formula Student name while doing so, and act irresponsibly or recklessly, may at the organiser's sole discretion be deemed to have acted in breach of this rule.

A6.5 Onsite Working Safety

A6.5.1 Everyone in the dynamic area and everybody working on the vehicle must wear appropriate, closed-toed shoes.

A6.5.2 Appropriate personal protective equipment must be used.

A6.5.3 Any operation producing litter or debris, e.g. cutting of carbon fibre, must not be performed in the pits.

A6.5.4 When jacking up the vehicle, a safe and stable support device rated for the load must be used.

A6.6 Alcohol, Illegal Drugs and Illegal Material

A6.6.1 Drivers should not consume alcohol at least 24 hours before any event they are competing in and may be subject to random breathalyser checks.

A6.6.2 The use of alcohol or any illegal drug is strictly prohibited on the competition site. If any team member is tested with an alcohol level higher than 0.0 % or positive for illegal drugs, they will be immediately disqualified for the rest of the competition. A second team member being found to have an alcohol level higher than 0.0% or positive for illegal drugs will result in the entire team being disqualified immediately.

A6.6.3 Team members must ensure they will not be impaired in a manner that could compromise safety by any prescription medications and over-the-counter drugs used as directed for medical purposes.

A6.7 Vehicle Movement

A6.7.1 Vehicles must not move under their own power anywhere other than on the practice or competition tracks.

A6.7.2 [EV ONLY] The detachable handle or key of the Tractive System Master Switch (TSMS) must be completely removed and kept by an ESO. The lockout/tagout function of the TSMS, see EV6.2.2, must be used.

A6.7.3 [EV ONLY] The High Voltage Disconnect (HVD), see EV4.8, must be disconnected at all times (including taking part in static events) if the vehicle has not passed electrical inspection.

A6.7.4 [DV ONLY] DV vehicles must also have their autonomous system deactivated when being moved around the paddock (see T14.5). The detachable handle or key of the Autonomous System Master Switch (ASMS) must be completely removed and kept by an ASR. The lockout/tagout function of the ASMS, see T14.5.7, must be used.

A6.7.5 Vehicles must be pushed at a normal walking pace by means of a "push bar", see T13.1, and with a team member in the cockpit wearing the required driver equipment as defined in T13.3 except for helmet, arm restraints and balaclava.

A6.7.6 The team member in the cockpit must have full control of steering and braking.

A6.7.7 When the push bar is attached to the vehicle, the engine/tractive system must remain switched off.

A6.7.8 Vehicles with wings are required to have two team members walking on either side of the vehicle's front wing whenever the vehicle is being pushed.

A6.7.9 Any team found 'running with the car' may have their tech sticker removed and will have their car confiscated and quarantined by the Chief Technical Scrutineer for a minimum of one hour. The one hour will start and end at the discretion of the Chief Technical Scrutineer.

A6.8 [CV ONLY] Engine Running

A6.8.1 Running engines are not allowed in the pits.

A6.8.2 Engine running and LV hybrid system activation is allowed in the engine test area and in the dynamic area, when the following conditions are met:

- The vehicle must have passed mechanical inspection,
- The vehicle must be jacked up using a quick jack, see T13.2,
- A driver, wearing required driver equipment, see T13.3, must be seated in the cockpit,
- A fire extinguisher must be immediately available,
- Driven wheels can only remain fitted to the vehicle if they will not rotate,
- No one is allowed under the vehicle while the engine is running.

A6.8.3 Cranking engines in the pits is allowed, when the following conditions are met:

- The vehicle has passed mechanical inspection,
- The driven axles are securely jacked up,
- Gearbox is in neutral,
- All driven wheels are removed,
- Connectors to all injectors and ignition coils are detached,
- A fire extinguisher must be placed next to the engine.

A6.9 Fuelling and Oil

A6.9.1 Fuelling may only take place at the fuel station and must be conducted by officials only.

A6.9.2 Open fuel containers are not permitted at the competition.

A6.9.3 Waste fuel and oil should be disposed of at the location specified in the Event Handbook.

A6.10 [EV ONLY] Working on the Tractive System

A6.10.1 Activities on the Tractive System (TS), except for the accumulator (see A6.11) must take place in the pit.

A6.10.2 All activities require the attendance of the ESO. When the LVMS is switched on, the TSAL must be green at all times, if the LVMS is switched off, the ESO is responsible for testing and declaring the vehicle to be safe prior to any further work being carried out.

A6.10.3 For activities on the inactive TS, the following procedure must be carried out:

- The vehicle must be barred from anyone not involved in the work, by using barrier tape,
- The Tractive System Master Switch (TSMS) must be switched off,
- It must be assured that the TS cannot by restarted by, at a minimum, using the lockout/tag out of the TSMS,
- A check for zero-potential must be carried out,
- A sign that declares the vehicle is electrically safe must be installed. The name of the ESO who is supervising the activities must be noted on the sign. This ESO is the only person who may remove the sign and the barrier.

A6.10.4 In case of measurements on the active TS or activation of the TS for testing purposes, the following steps must be followed:

- The vehicle must be located in either the EV scrutineering area or one of the permitted “TS Active” zones (see Team Handbook for details),
- The vehicle must be barred from anyone not involved in the work, by using barrier tape,
- The vehicle must be jacked up and the driven wheels removed,
- One team member must be prepared to push a shutdown button at any time,
- The TS must only be activated for as long as necessary,
- Appropriate insulated tools and equipment must be used,
- Safety glasses with side shields and compliant safety gloves must be worn by all participating team members when parts of the TS are exposed,
- No other work on the vehicle is permitted when the TS is active.

A6.10.5 If the TSAL is flashing red or malfunctioning, the TS is considered as active.

A6.10.6 There must be at least one team member present, who is not directly involved in the work, but who could assist in case of an incident.

A6.11 [EV ONLY] Working on Tractive System Accumulators

A6.11.1 Opening or working on Tractive System Accumulator Containers (TSACs) is only allowed in the provided workplaces in the charging area, see A6.12.

A6.11.2 All activities require the attendance of an ESO.

A6.11.3 Whenever the TSACs are opened, the cell segments must be separated with the maintenance plugs, see EV5.4.7.

A6.11.4 Appropriate insulated tools and equipment must be used.

A6.11.5 Safety glasses with side shields and compliant safety gloves must be worn by all participating team members.

A6.11.6 There must be at least one team member present, who is not directly involved in the work conducted on the accumulator, but who could assist in case of an incident.

A6.11.7 Moving accumulator cells and/or accumulator segment(s) around at the competition site is only permitted if they are inside a completely closed TSAC.

A6.11.8 Additional safety measures may be included in the Team Handbook.

A6.12 [EV ONLY] Charging

A6.12.1 There will be a separated charging area on the competition site. Charging TS accumulators is only allowed inside this area.

A6.12.2 Accumulators must be removed from the vehicle and placed on the TSAC hand cart, see EV8.1, for charging.

A6.12.3 The label required in EV5.3.5 must be visible during charging.

A6.12.4 No grinding, drilling, etc. is allowed in the charging area.

A6.12.5 At least one ESO who has knowledge of the charging process must stay with the accumulator(s) during charging.

A6.13 Team Radios

A6.13.1 Any team radios must comply with PMR446:

https://www.ofcom.org.uk/__data/assets/pdf_file/0025/85156/ir_2009_analogue_and_digita1.pdf

A6.13.2 Operating on any other frequencies, or with transmission powers greater than 0.5W requires a licence from OFCOM.

A6.13.3 All team telemetry must be transmitted on a 2.4Ghz frequency. Teams must not transmit on a 5Ghz or any other frequency.

A6.14 Official Event Schedule

A6.14.1 The master version of the Event Schedule will be posted on the competition website. In the event of any differences between the master version and any version published elsewhere, then the timings published in the master version prevail.

A6.15 Static Event Judging Schedule

A6.15.1 In respect for the volunteer judges, teams must notify officials of any inability to attend a scheduled judging session by the date and time specified in the Team Handbook. Please refer to Rule S1 for applicable penalties if this is not adhered to.

A6.15.2 In exceptional circumstances teams may be offered an alternative scheduled time, but this cannot be guaranteed, and teams must make their best efforts to attend at their original allocated judging time and location.

A6.16 Mandatory Safety Briefings

A6.16.1 The Event Schedule details the time and location of all mandatory safety briefings. Failure to attend these briefings and receive the allocated wristband will result in that team member being unable to complete their intended role(s).

SECTION T – GENERAL TECHNICAL REQUIREMENTS

T1 DEFINITIONS

As per 2027 Formula Student Rules V1.0.

T2 GENERAL DESIGN REQUIREMENTS

As per 2027 Formula Student Rules V1.0, except:

T2.6 Wheels

T2.6.5 Extended or composite wheel studs are prohibited.

T2.6.6 Wheel spacers are permitted. Laminated or multiple spacers per wheel are not permitted.

T2.7 Tyres

T2.7.5 Single-use plastic tyre covers, e.g. cling film, are prohibited.

T2.8 Steering

T2.8.10 Joints between all components attaching the steering wheel to the steering rack must be mechanical and visible at technical inspection. Bonded joints without a mechanical backup are not permitted. The mechanical backup must be designed to solely uphold the functionality of the steering system.

T3 GENERAL CHASSIS DESIGN

As per 2027 Formula Student Rules V1.0, except:

T3.7 Structural Documentation

T3.7.1 A SE3D and ASES are not required for Formula Student UK.

T3.7.2 The SES form can be downloaded from the Formula Student UK competition website.

T3.7.3 A SE3D submission is not required for Formula Student UK.

T3.7.4 As part of the SES submission, teams will be required to provide evidence of a new chassis via a written comparison describing the physical differences between the submitted Primary Structure design with that of the most recent previous.

SES demonstrating minimal change in design between their old and new chassis will be passed to the Design Judges for consideration of penalty points under Rule S5.7.2.

Photographic evidence demonstrating a 'new chassis' will be required for Chassis Scrutineering as per Rule IN5.1.1.

Teams who fail to satisfy Rule A2.2 may be disqualified from the competition.

T3.7.5 Reports submitted on time, but which do not contain the required information (e.g. a "placeholder report" submitted to avoid penalties but without the required data) will be treated as a non-submission.

T3.7.6 SES submission will be graded based on the completeness and quality of information provided in SES. It will not be an appraisal of the quality of design. Grades will range from A to F based on the following definitions:

A. Completed to a high standard with clear graphics, notes and engineering justification.

B. Completed to a good standard with clear graphics and notes.

C. Completed to a minimum acceptable standard.

D. Notes and graphics difficult to read and/or poorly presented.

E. Repeat of the same errors for the same or similar design as in a previous year's original submission.

F. Late submission, incorrect SES template or major sections missing such that SES is deemed a 'non-submission'.

Grades will be published online and shared with Design Judges. No points will be awarded for grades A-E. An F grade will carry 10 to 50 penalty points.

T3.18 Impact Attenuator Data Requirement

T3.18.1 All teams must submit an IA Data report using the Impact Attenuator Data (IAD) template provided on the Formula Student website.

- If a report does not use this template, it will automatically incur a 10-point design penalty,

- **Templates from other Formula Student/FSAE competitions are not acceptable. The report will still be assessed to ensure that the IA meets the rules requirements and to allow the team to compete**,
- Minor violations in report layout will be dealt with via the downgrading process outlined in Rule T3.18.5.

T3.18.2 Reports submitted late will incur lateness penalties as described in the Key Dates document published on the Formula Student website. However, these reports will still be assessed to ensure that the IA meets the rules requirements and to allow the team to compete.

T3.18.3 Reports submitted on time, but which do not contain the required information (e.g. a "placeholder report" submitted to avoid penalties but without the required test data) will be treated as a non-submission and dealt with according to Rule T3.18.2.

T3.18.4 Reports will be assessed by a team of judges using a common approach. A selection of reports will be moderated by the Lead IAD Judge to ensure consistency.

T3.18.5 Reports will be assessed according to the following process, in order to grade them from A to F:

- Reports are initially assigned a grade according to the type of testing carried out. Dynamic tests are initially assigned a 'B' grade; Quasi-static (crush) tests a 'C' grade; and teams using a Standard IA an 'E' grade.
- The report is then assessed to ensure that the IA meets the rules requirements for energy absorption, deceleration levels, dimensions, mounting arrangements etc. Impact Attenuators which do not meet these requirements will automatically incur a 10-point penalty, and the team will be contacted by the Judges to determine appropriate modifications or re-design to allow them to compete.
- If the IA design meets the rules, the report will then be assessed for quality. Minor items of missing information or poor explanation or presentation may lead to the report being downgraded by up to two grades. Teams will be contacted and asked to supply missing information, but the downgrade will remain. A high-quality report may be upgraded by up to two grades.
- IA reports for a standard FSAE IA may be upgraded by up to two grades if they include additional analysis or testing – for example finite element simulation or testing of material samples.

T3.18.6 Once the report has been graded, the grade will be converted into design penalty points as follows:

- A = 0 points; B = 0 points; C = 1 point; D = 4 points; E = 8 points; F = 10 points.
- These penalties will be forwarded to the Head Design Judge for inclusion in the overall design score.

T3.21 Mechanically Attached Roll Hoop Bracing

T3.21.1 Any non-welded joint at either end of a bracing should be either a double-lug joint, see Figure 7, or a sleeved joint, see Figure 8. Alternative joint types must prove equivalency to either a double-lug joint or a sleeved joint. Spherical rod ends are prohibited.

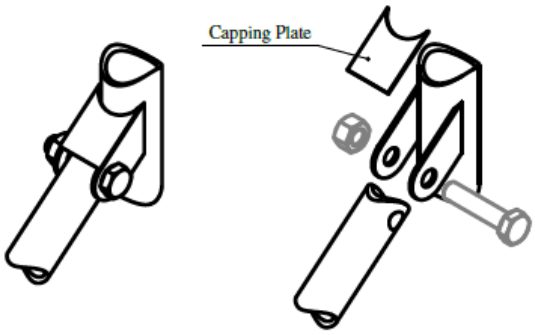

Figure 1: Double lug joint

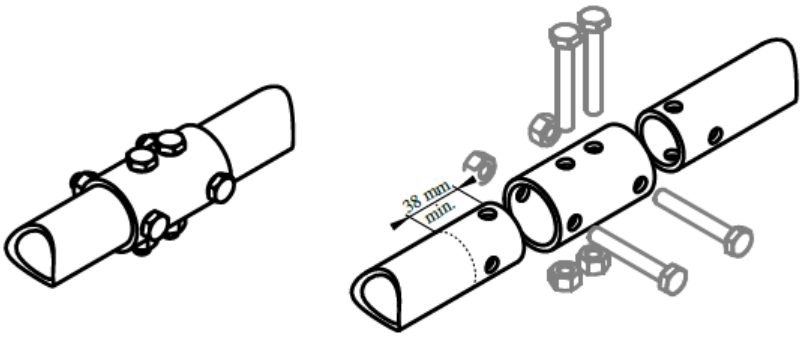

Figure 2: Sleeved joint

T3.21.2 If threaded fasteners are used, they are considered critical fasteners and must comply with T10.1.

T3.21.3 Double lug-joints must include a capping arrangement, see Figure 7.

T3.21.4 In a double lug joint each lug must be at least 4.5mm thick and the pin or bolt must be 10mm metric grade 8.8 minimum. The attachment holes in the lugs and in the attached bracing must be a close fit with the pin or bolt.

T3.21.5 For sleeved joints the sleeve must have a minimum length of 38mm either side of the joint and be a close-fit around the base tubes. The wall thickness of the sleeve must be at least that of the bracing tubes. The bolts must be 6mm metric grade 8.8 minimum. The holes in the sleeves and tubes must be a close-fit with the bolts.

T4 COCKPIT

As per 2027 Formula Student Rules V1.0, except:

T4.6 Driver's Seat

T4.6.3 Any seat mounting bracket or other support structure must not punch through the seat when a load of 60kN is applied normal to the seat surface at the attachment location.

NOTE: The calculation method for this may be similar to the perimeter shear calcs for monocoque attachments.

T4.6.4 The driver's seat, and any covering applied to it, must be made of fire-retardant material. Materials tested to BS EN/ISO 7176 meet this rule. Materials tested to other standards may be adequate.

T4.8 Firewall

T4.8.1 [As T4.8.1 in 2027 Formula Student Rules V1.0 Except the following clarification] The firewall must also cover liquid cooling systems and any part of the air intake system forward of a vertical plane through the front face of the driver head restraint support, excluding any padding, set to its most rearward position.

T5 DRIVER RESTRAINT SYSTEM

As per 2027 Formula Student Rules V1.0, except:

T5.2 Belts - General

T5.2.2 SFI spec harnesses must be replaced following December 31st of the 2nd year after the date of manufacture as indicated by the label. FIA spec harnesses must be replaced following December 31st of the 5th year after the date year marked on the label.

T5.3 Belt, Strap and Harness Installation - General

T5.3.4 The tab or bracket to which any harness is attached must have:

- A minimum cross-sectional area of 60mm^2 of steel, or equivalent alternative, to be sheared or failed in tension at any point of the tab, and,
- A minimum thickness of 1.6mm (steel) or 4mm (aluminium).

Where lap belts and anti-submarine belts use the same attachment point, a minimum cross-sectional area of 90mm^2 of steel, or equivalent alternative, to be sheared, if failed in tension, at any point of the tab.

T5.4 Lap Belt Mounting

T5.4.7 If eye bolts are used, the Anti-Submarine Belt mounts must not share the Lap Belt Mounting.

T5.5 Shoulder Harness

T5.5.6 Any bracket used to mount the shoulder harness must not be able to contact the driver in the event of an impact.

T5.6 Anti-Submarine Belt Mounting

T5.6.2 All anti-submarine belts must be installed so that they go in a straight line from the anchorage point(s) to the first point where the belts touch the driver's body for the 6-point or 7-point mounting, without touching any hole in the seat or any other intermediate structure.

T5.7 Head Restraint

T5.7.2 [AS T5.7.2 IN 2027 FORMULA STUDENT RULES V1.0 EXCEPT THE FOLLOWING CLARIFICATION] The Head Restraint padding must be covered with a thin, flexible material that contains a ~20mm diameter inspection hole in a surface other than the front surface. And note:

- CONFOR M foam CF-42 (pink) or CF-42M (pink). CF-42AC (pink) are acceptable for FSUK,
- As an exception to Formula Student Rules V1.1, the Head Restraint, have a minimum thickness of 38mm,

For all drivers, the Head Restraint must be located and adjusted so that:

- All material and structure of the Head Restraint is within the Rollover Protection Envelope (see T1.1.16).

T5.10 Driver Arm Protection

T5.10.1 The combination of the Primary Structure, driver position and harness installation must be such that while the driver is in the fully seated position, hands in the driving position on the connected steering wheel (in all possible steering positions) and wearing the required driver equipment:

- Can turn the steering wheel lock to lock.
- Cannot move their arms (while still holding onto the connected steering wheel) such that any part of the driver falls outside of the Rollover Protection Envelope. (e.g. the arm restraints or the chassis should prevent arms/elbows from falling outside of the Rollover Protection Envelope).

NOTE: this will be checked for each driver prior to the Egress Test.

T6 BRAKE SYSTEM

As per 2027 Formula Student Rules V1.0, except:

T6.3 Brake Light

T6.3.1 [EV ONLY] [AS T6.3.1 IN 2027 FORMULA STUDENT RULES V1.0 EXCEPT THE FOLLOWING CLARIFICATION] The brake light must also illuminate when the regenerative braking system is actuated upon release of the accelerator pedal and the deceleration exceeds $1m/s^2 \pm 0.3m/s^2$. The team must prove the function of the brake light during technical inspection by elevating the rear of the car to an angle of 6 degrees to simulate a deceleration of $1m/s^2$ with the regenerative braking system active or by another method agreed in advance with the scrutineers.

T7 POWERTRAIN

As per 2027 Formula Student Rules V1.0, except:

T7.2 Coolant Fluid and System Sealing

T7.2.3 [As T7.2.3 in 2027 Formula Student Rules V1.0 Except the following clarification] Covers must meet the requirements of T4.8.

T7.2.7 [As T7.2.7 in 2027 Formula Student Rules V1.0 Except the following clarification] The use of unmodified Original Equipment Manufacturer (OEM) components in their design context is allowable.

T8 AERODYNAMIC DEVICES

As per 2027 Formula Student Rules V1.0, except:

T8.1 Definition Aerodynamic Device

T8.1.2 No power device (e.g. fan) may be used to move or remove air from under the vehicle.

T8.3 Aerodynamic Devices Stability and Strength

T8.3.3 [AS T8.3.1 IN 2027 FORMULA STUDENT RULES V1.0 EXCEPT THE FOLLOWING CLARIFICATION] A lower force may be applied, e.g. 100N instead of 200N. The allowable deflections will be scaled by the ratio of the applied load/200N for T8.3.1 or applied load/50N for T8.3.2.

T8.3.4 If any vehicle on track is observed to have large, uncontrolled movements of aerodynamic devices, then officials may Black with Orange Circle Flag the car for inspection and the car may be excluded from that run and prevented from further running until any issue identified is rectified.

T8.4 Minimum Edge Radii of Aerodynamic Devices

T8.4.5 All forward facing edges of aerodynamic devices that could contact a pedestrian must have a minimum radius of 5mm for all horizontal edges and 3mm for vertical edges.

T9 COMPRESSED GAS SYSTEMS AND HIGH-PRESSURE HYDRAULIC SYSTEMS

As per 2027 Formula Student Rules V1.0, except:

T9.2 General Requirements

T9.2.2 [AS T9.2.2 IN 2027 FORMULA STUDENT RULES V1.0 EXCEPT THE FOLLOWING CLARIFICATION] Any CGS or HPHS tanks and hardlines or hoses must not be located in the cockpit.

T9.4 Gaseous Fuel Systems

T9.4.1 Any gas system on the vehicle that is used as a means of propulsion or energy source (e.g. to charge a battery through a fuel cell) must comply with the following requirements:

- Working Gas - The working gas may be flammable, but only if it is to be burned or used for the sole means of propulsion of the vehicle.
- Cylinder Certification - The gas cylinder/tank must be of proprietary manufacture, designed and built for the pressure being used, certified by an accredited testing laboratory in the country of its origin, and labelled or stamped appropriately. The following standard for composite cylinders applies: ISO11439 for hydrogen containers or NGV1 or ECE-R110 for natural gas, methane or similar gases. In accordance with cylinder standards, cylinders found to have external defects such as abrasions or chemical corrosion must not be used.
- Pressure Regulation - Where cylinders are interchangeable the pressure regulator must be mounted directly onto the gas cylinder/tank. If the vehicle is to be refuelled with the cylinder on-board the vehicle, the cylinder must be fitted with an internal solenoid, supplied by Dynetek or Teleflex GFI, this must be followed by an excess flow valve prior to fitting of a regulator. The inlet to the solenoid must be directly coupled to a check valve, with a cracking pressure no greater than 1psi to ensure gas flow may only flow out of the cylinder via the regulator.
- Protection - The gas cylinder/tank and lines must be protected from rollover, collision from any direction, or from damage resulting from the failure of rotating equipment. It is advised ECE-R110 documents are consulted for recommendations regarding the safe installation of gas systems.
- Cylinder Location- The gas cylinder/tank and the pressure regulator must be located either rearward of the Main Roll Hoop and within the Primary Structure envelope, or in a structural side-pod that meets the requirements of T3.2. It must not be located in the cockpit.
- Cylinder Mounting - The gas cylinder/tank must be securely mounted to the Frame, engine or transmission and meet the requirements of T9.2.
- Cylinder Axis - The axis of the gas cylinder/tank must not point at the driver.
- Insulation - The gas cylinder/tank must be insulated from any heat sources, e.g. the exhaust system.
- Lines and Fittings - The gas lines and fittings must be appropriate for the maximum possible operating pressure of the system and must be assembled according to manufacturer's recommendations. As part of the safety form, for gas systems teams

must:

i. Provide gas system diagrams,

ii. Provide details of all components used in the system so that they can be approved by the rules committee. (These can be approved prior to submission of the safety documents if required),

iii. Provide details of proof testing for pressurization of the whole system to working pressure in addition to a leak test on all fittings. (If the testing is not conducted before the safety documentation is submitted then this information must be available at scrutineering),

iv. Demonstrate single failure tolerant design; other than the tank and gas lines, the system must be capable of containing the gas in the event that any failure occurs in any one component. Where reasonably possible a component failure should cause the fuel solenoid to close. Teams must be able to demonstrate how to identify whether a component functions correctly or not.

- The maximum allowable storage pressure is 350bar.
- All gas cylinders, regulators, solenoid valves and other equipment exposed to pressurized gas must be appropriately certified for use with the gas being used and the pressure that they are being used at.
- Where vehicle refuelling is to be carried out onsite the following cylinder connections are to be used:

  i. 350bar hydrogen: SAE J2600-H35 and ISO 17268,

  ii. 200 bar CNG: ISO 14469.

- Ventilation - any leaked gas should be able to freely dissipate without pockets of gas accumulating. Gas detection systems must be placed in the most likely escape paths for gas but should not create an obstacle to the escaping gas.

T10 FASTENERS

As per 2027 Formula Student Rules V1.0.

T11 ELECTRICAL COMPONENTS

As per 2027 Formula Student Rules V1.0, except:

T11.1 Low Voltage System

T11.1.2 [REPLACES T11.1.2 IN 2027 FORMULA STUDENT RULES V1.0] The maximum permitted voltage that may occur between any two electrical connections in the LVS is 60 V DC or 25 V AC RMS.

T11.5 Inertia Switch

T11.5.2 [REPLACES T11.5.2 IN 2027 FORMULA STUDENT RULES V1.0] The device must trigger due to an omnidirectional peak acceleration of ≤8 g for a half sine test pulse of ≥50ms length and ≤13g for a half sine test pulse of ≥20ms length. The "Sensata Resettable Crash Sensor" should meet those requirements.

T11.6 Brake System Plausibility Device

T11.6.10 [EV ONLY] The team must prove the function of the BSPD during technical inspection by sending an appropriate signal that represents the current, in order to achieve 5 kW whilst pressing the brake pedal. This test must prove the functionality of the complete BSPD except for any commercially available current sensors. As per 2027 Formula Student Rules V1.0 IN4.1.3.

T11.7 Low Voltage Batteries

T11.7.3 [REPLACES T11.7.3 IN 2027 FORMULA STUDENT RULES V1.0] All batteries must be separated from the driver and sources of heat by a firewall as specified in T4.8.

T11.7.8 All batteries that are less than 350mm above the ground must be shielded from front, side and rear impact collisions, by a fully triangulated structure meeting T3.2 or equivalent.

T11.7.9 Ungrounded terminals must be insulated.

T11.7.10 LV batteries must have overcurrent protection, not more than 100mm from ungrounded terminals, that trips at or below the maximum specified discharge current of the cells within the time periods specified on the datasheet for the battery.

For example, if the datasheet specifies a continuous discharge current of 70A, a 10 second discharge pulse current of 120A and a 1 second discharge pulse current of 150A, the overcurrent protection must not allow any of these requirements to be exceeded.

T11.7.11 All LV batteries using chemistries other than lead acid shall be:

- Presented at technical inspection with markings identifying it for comparison to a datasheet and/or other documentation proving the pack and supporting electronics meet all rules requirements.
- Installed such that emergency responder can effectively direct extinguishing media onto the battery without delay or significant obstruction. The arrangement shall:
  i. Provide a clearly identifiable means of accessing or direction extinguishing media to the battery from outside the vehicle, without requiring body panel removal and with the driver seated in the normal driving position.
  ii. Ensure the access point or mechanism is readily visible and recognisable to track

marshals and emergency responders approaching the vehicle.

iii. Where a dedicated access point, access port, or other specific interface is required to enable extinguishing media to be directed onto the battery, its location shall be externally identified using the symbols in Figure19.

Figure 3: Fire Port location markings

iv. Where the battery is not immediately adjacent to the access point, provide an effective means of directing extinguishing media from the access location to the battery.

- Identified with the symbol below (minimum height 75mm and showing the appropriate battery chemistry) on each side of the car AND adjacent to any other labels required by T11.7.11.

Figure 4: Battery Chemistry marking

T11.7.12 Battery packs based on lithium chemistry other than lithium iron phosphate ($LiFePO_4$) and all LV hybrid system energy stores, regardless of chemistry type:

- Must include overcurrent protection that trips at or below the maximum specified discharge current of the cells,

- Must have a fire-retardant casing, see T1.2.1.
- Must include overtemperature protection of at least 30 % of the cells, meeting EV5.8.4, that trips when any cell leaves the allowed temperature range according to the manufacturer's datasheet, but not more than 60°C, for more than 1s and disconnects the battery,
- Must include voltage protection of all cells that trips when any cell leaves the allowed voltage range according to the manufacturer's datasheet for more than 500ms and disconnects the battery,
- It must be possible to display all cell voltages and measured temperatures, e.g. by connecting a laptop,
- Signals needed to fulfil these requirements are SCS, see T11.9.

T11.8 Accelerator Pedal Position Sensor (APPS)

T11.8.5 [REPLACES T11.8.5 IN 2027 FORMULA STUDENT RULES V1.0] At least two separate sensors must be used as APPSs. Separate is defined as not sharing supply or signal lines. They may share a common housing if the use of independent supply and signal lines is easily determined.

T11.8.13 When any kind of digital data transmission is used to transmit the APPS signal, the ESF must contain a detailed description of all the potential failure modes that can occur, the strategy that is used to detect these failures and the tests that have been conducted to prove that the detection strategy works. The failures to be considered must include but are not limited to the failure of the APPS, APPS signals being out of range, corruption of the message and loss of messages and the associated time outs.

T11.8.14 Any algorithm or electronic control unit that can manipulate the APPS signal, for example for vehicle dynamic functions such as traction control, may only lower the total driver requested torque and must never increase torque unless it is exceeded during a gearshift. Thus, the drive torque which is requested by the driver may never be exceeded.

T11.9 System Critical Signal

T11.9.1 [As T11.9.1 in 2027 Formula Student Rules V1.0 Except the following clarification]

- [DV ONLY] Influence indicator according to T14.10.4.

T11.9.7 The ESF must contain a detailed description of all the potential failure modes that can occur for each SCS, the strategy that is used to detect these failures and the tests that have been conducted to prove that the detection strategy works. The failures to be considered must include but are not limited to the failure of sensors and actuators, signals being out of range, corruption of the message and loss of messages and the associated time outs.

T11.12 Sensors & Electrical Components Mounting

T11.12.1 [As T11.12.1 in 2027 Formula Student Rules V1.0 with the following addition] For all mounts, T2.4.1 applies.

T11.12.5 Antennas may also be mounted on the aerodynamic devices, if they do not protrude from the bounding box of the device.

T11.12.6 Additionally, sensors may be mounted with a maximum distance of 500mm above the ground and less than 700mm forward of the front of the front tyres (see Figure 5). They must not exceed the width of the front axle (measured at the height of the hubs).

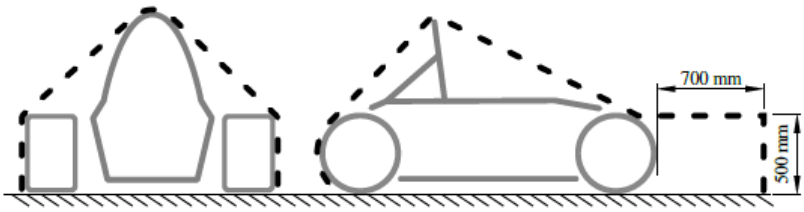

Figure 5: Envelope to mount sensor systems.

T11.12.7 The body of any video/photographic camera which is not exclusively used as sensor for the AS unit must be secured at a minimum of two points on different sides of the camera body. If a tether is used to restrain the camera, the tether length must be limited so that the camera cannot contact the driver. Such camera installations must be approved at technical inspection.

T12 VEHICLE IDENTIFICATION

T12.1 Vehicle Number

T12.1.1 Each team will select an available number at the time of its entry into Formula Student. Vehicle numbers 1-10 are reserved for the top 10 overall finishers at last year's Formula Student competition.

T12.1.2 Vehicle numbers must appear on the vehicle at the front and both sides as follows:

- Height: At least 150mm high.
- Font: Roman Sans-Serif characters. Italic, outline, serif, or shadow numbers are prohibited.
- Stroke width and spacing between numbers: At least 20mm.
- Colour: Either white numbers on a black background or black numbers on a white background, except as described in T12.1.3 and T12.1.4.
- Background shape: The number background must be one of the following: round, oval, square or rectangular. There must be at least 25mm between the edge of the numbers and the edge of the background.
- Clear: The numbers must not be obscured by parts of the vehicle.

T12.1.3 Any car which uses high voltage electrical energy as a means of propulsion must use a light green background for the numbers. Note: it is not necessary, but is permissible, to have a letter E before the number.

T12.1.4 Any car which uses a gaseous fuel must use an orange background for the numbers.

T12.2 Hybrid Vehicle Identification

T12.2.1 Combustion Hybrid Vehicles must be identified by an additional marking next to all three vehicle numbers with the capital letters "HY" in Roman Sans-Serif characters at least 75mm high in white on a red background.

T12.3 University Name

T12.3.1 The university name must be written fully. Only the following abbreviations in the university name are accepted, if the city name is written fully:

- University - Uni
- Technical University - TU
- University of Applied Sciences - UAS
- Berufsakademie - BA
- If the university officially uses an abbreviation in their proper name, this abbreviation is accepted.

T12.3.2 The university name must be displayed and written in Roman Sans-Serif characters of at least 50mm high on both sides of the vehicle.

T12.3.3 The characters must be clearly visible at a distance and placed on a high contrast background.

T12.4 Timing Equipment

T12.4.1 All vehicles will get timing equipment provided by the competition organizers.

T12.4.2 The transponder mounting requirements are:

- Orientation – The transponder must be mounted vertically and orientated so the number can be read "right-side up".
- Location – The transponder must be mounted on the driver's right side of the car forward of the front roll hoop. The transponder must be no more than 60cm (24 in) above the track.
- Obstructions – There must be an open, unobstructed line between the antenna on the bottom of the transponder and the ground. Metal and carbon fibre may interrupt the transponder signal. The signal will normally transmit through fibreglass and plastic. If the signal will be obstructed by metal or carbon fibre, a 10.2cm (4 in) diameter opening may be cut, the transponder mounted flush with the opening, and the opening covered with a material transparent to the signal.
- Protection – Mount the transponder where it will be protected from being hit by cones.

T12.5 Formula Student Logo

T12.5.1 Each car will be required to append three (3) Formula Student logos, 20cm x 15cm. One (1) marking to the front end of the nose of the car and one (1) on each side panel, ideally above the race number plate or within the top third of the side panels, (these will be supplied by the organisers). No sponsor or other markings will be permitted to encroach on these areas. A document showing the requirements can be found here:

https://www.imeche.org/events/formula-student/team-information/logo-usage

Alternatively, teams may incorporate the Formula Student logo into their own colour/graphics schemes, in any of the permitted colour options, providing the logo meets the size and location requirements above and does not breach the Institution Brand Guidelines – see the Formula Student Website. The logo is available in various formats on the Use of Logos webpage.

T13 VEHICLE AND DRIVER EQUIPMENT

As per 2027 Formula Student Rules V1.0, except:

T13.1 Push Bar

T13.1.5 [As T13.1.5 in 2027 Formula Student Rules V1.0 Except the following clarification] This rule is relevant for all powertrain types.

T13.1.6 [As T13.1.6 in 2027 Formula Student Rules V1.0 Except the following clarification] Test leads must be rated for 1000V CAT III or better.

T13.2 Jacks

T13.2.1 [As T13.2.1 in 2027 Formula Student Rules V1.0 Except the following clarification] All non-driven wheels must not touch anything else than the ground.

T13.2.6 In addition to a quick jack, each team must have a set of jack stands, trestles or similar, that will safely support the complete car for inspections during scrutineering while not presenting a tripping hazard to the scrutineers and team members.

The stands/trestles must:

- Support the car with all four wheels a minimum of 100mm off the ground,
- When in place, be completely within the plan profile of the car.

T13.3 Driver Equipment

T13.3.2 A well-fitting, closed face helmet that meets one of the following certifications and is labelled as such:

- Snell SA2020
- FIA 8859-2015, FIA 8860-2010, FIA 8860-2018, FIA 8860-2018-ABP

Any kart or motorcycle standard helmets, including but not limited to Snell K, CMR or CMS standards are not permitted for use at Formula Student.

Non-UK teams may also use helmets that comply with their own sanctioning body, but these helmets must also be permitted by the FSAE Rules. Approval for use of alternative helmets to those listed above must be sought from formulastudent@imeche.org. Note: the reference number in the helmet must be included.

The use of a Frontal Head Restraint (FHR) is not mandatory at Formula Student but is strongly recommended. If an FHR is used:

- The combination of helmet and FHR standards must comply with the table published on the Motorsport UK website here: https://motorsportuk.s3.eu-west-2.amazonaws.com/wp-content/uploads/2022/04/v9.0-Motorsport-UK-Standards-for-FHR.pdf
- The FHR and shoulder harnesses must be properly adjusted as per the manufacturer's recommendations. Guidance notes published by the FIA can be found here: https://www.fia.com/sites/default/files/hans_guide_and_installation_spec_19.03.2022.pdf

https://www.fia.com/sites/default/files/hybrid_fhr_guide_and_installation_spec_19.03.2022.pdf

- It must be in good condition.
- Any driver using an FHR must wear the FHR during their driver egress test.

T13.3.5 The driver's suit must comply with FIA 8856-2000 or FIA 8856-2018. Non-UK teams may also use driver's suits that comply with their own sanctioning body, but these driver suits must also be permitted by the 2027 Formula Student Rules. Approval to use alternative driver's suits to those listed above must be sought from formulastudent@imeche.org

NOTE: a scan of the suit label must be supplied with the submission. If driver suits (or other equipment) are modified in any way, teams must demonstrate that compliance to relevant standards, rules and good practices have been maintained and proven.

T13.3.16 During wet weather it is prohibited to wear any form of waterproof garment over the drivers suit whilst competing, unless it meets FIA 8856-2018 standards.

T13.3.17 A second complete set of driver equipment (e.g. balaclava, suit, underwear, socks, shoes and gloves), except arm restraints and helmet, are required and must be presented at technical inspection. Exchange of driver equipment between drivers at driver change is prohibited, except for arm restraints and helmet. A second complete set of driver equipment is not required for FS-AI entries.

T13.3.18 Any driver radio is included in the definition of driver equipment and subject to scrutineering at the event.

T13.4 Fire Extinguishers

T13.4.1 Each team must have at least two dry chemical/dry powder fire extinguishers with a minimum firefighting agent capacity of 0.9kg.

T13.4.2 The following are the minimum accepted ratings:

- USA, Canada and Brazil: 10BC or 1A 10BC,
- Europe: 34B or 5A 34B,
- Australia: 20BE or 1A 10BE.

Extinguishers of larger capacity (higher numerical ratings) are acceptable.

T13.4.3 Aqueous Film Forming Foam (AFFF) fire extinguishers are prohibited. Halon extinguishers and systems are prohibited.

T13.4.4 All extinguishers must be equipped with a manufacturer installed pressure/charge gauge.

T13.4.5 All fire extinguishers must have proof of purchase or service (e.g., a dated service tag) within two (2) calendar years of the final day of the competition.

T13.4.6 Except for the initial inspection, one extinguisher must readily be available in the team's paddock area, and the second must accompany the vehicle wherever the vehicle is moved. Both extinguishers must be presented with the vehicle at technical inspection.

T13.4.7 Handheld fire extinguishers are not permitted to be mounted on or in the vehicle.

T13.5 Camera Mounts

T13.5.5 The mounts for video/photographic cameras must be of a safe and secure design:

- All camera installations must be approved and sealed at technical inspection,
- Helmet mounted cameras are prohibited,
- The body of any camera or recording unit that weighs more than 0.25kg must be secured at a minimum of two points on different sides of the camera body. If a tether is used to restrain the camera, the tether length must be limited so that the camera cannot contact the driver.

  [DV ONLY] Cameras used as input sensors for driverless vehicles are exempted and must follow T11.12 instead.

T14 [DV ONLY] AUTONOMOUS SYSTEM

As per 2027 Formula Student Rules V1.0, except:

T14.1 Definitions

T14.1.3 Teleoperated driving is not allowed.

T14.2 Data logger

T14.2.1 An AS Datalogger is not provided at Formula Student UK.

T14.2.2 An AS Datalogger is not provided at Formula Student UK.

T14.4 Shutdown Circuit

T14.4.2 If the SDC is opened by the AS or the RES, it must be latched open by a non-programmable logic that can only be reset manually (either via a button outside of the vehicle, in proximity to the ASMS, or via LVMS power cycle).

T14.5 Autonomous System Master Switch

T14.5.4 The power supply of the steering and braking actuators must be switched by

- LVMS,
- ASMS,
- The normally-open contact of the RES bypass relay.

Other than stated in T11.2.1, non-programmable logic may be used as part of the ASMS.

T14.5.8 After switching the ASMS to the "On" position, the vehicle may not start moving, until the "AS driving" state is entered (Figure 17).

T14.8 Autonomous System Status Definitions

T14.8.6 Performing manual steps, other than activating the TS, at the car while the ASMS is switched "On" is prohibited.

T14.10 Autonomous Missions

T14.10.9 If an e-ink display is used, it must be visible that the shown mission is up to date. The AMI is considered SCS.

T15 [DV ONLY] AUTONOMOUS SYSTEM BRAKE

As per 2027 Formula Student Rules V1.0, except:

T15.1 Technical Requirements

T15.1.9 The use of push-in fittings is prohibited in function critical pneumatic circuits of the ASB and any other system which uses the same energy storage without proper decoupling.

T15.2 Emergency Brake System

T15.2.2 The EBS must be directly supplied by LVMS, ASMS, the normally open contact of the RES relay and a relay which is supplied by the SDC (parallel to the AIRs but must not be delayed).

T15.3 Functional Safety

T15.3.7 A red indicator light in the cockpit that is easily visible from inside and outside the cockpit even in bright sunlight and clearly marked with the lettering “ASB” must light up if the SDC is opened due to an ASB failure.

T15.4 Emergency Brake System Performance

T15.4.5 The performance of the system will be tested at technical inspection, see IN6.1.

SECTION CV – INTERNAL COMBUSTION ENGINE VEHICLES

CV1 INTERNAL COMBUSTION ENGINE POWERTRAINS

As per 2027 Formula Student Rules V1.0, except:

CV1.1 Engine Limitation

CV1.1.1 [AS CV1.1.1 IN 2027 FORMULA STUDENT RULES V1.0 EXCEPT THE FOLLOWING CLARIFICATION] For FSUK 'Hybrid' refers only to Low Voltage Hybrid, as per CV5. HV hybrid powertrains are permitted as an AFV.

CV1.3 Air Intake System

CV1.3.5 An air filter that will protect the powertrain from the ingress of dirt and debris must be installed at the entry of the Intake System.

CV1.6 Electronic Throttle Control

CV1.6.3 [AS CV1.6.3 IN 2027 FORMULA STUDENT RULES V1.0 EXCEPT THE FOLLOWING CLARIFICATION] The ETC system must also be equipped with one Brake System Encoder (BSE) to measure brake system pressure to check for plausibility.

CV1.6.10 An ETC system that is commercially available, but does not comply with CV1.6, may be used, only if it does comply with the intent of the rules and is approved by the officials. To obtain approval, the team must:

- Submit a rules question to ask the event organizers if that ETC system may be used.
- Include the specific ETC rule(s) that the commercial system deviates from.
- Include sufficient technical details of these deviations to allow the acceptability of the commercial system to be determined.

CV2 FUEL AND FUEL SYSTEM

As per 2027 Formula Student Rules V1.0, except:

CV2.1 Fuel

CV2.1.1 The basic fuels available at Formula Student are unleaded gasoline (Sustainable 95RON E10) and E85.

- Information on these fuels can be viewed at: https://www.imeche.org/events/formula-student/team-information/general-information
- The basic fuel types may be changed at the discretion of the event organisers. Other fuels may be available at the discretion of the organising body.

CV2.2 Fuel System Location Requirements

CV2.2.2 [AS CV2.2.2 IN 2027 FORMULA STUDENT RULES V1.0 EXCEPT THE FOLLOWING CLARIFICATION] All parts of the fuel storage and supply system must lie within the surface envelope, see T1.1.18. In side view no portion of the fuel system can project below the lower surface of the chassis.

CV2.2.5 Any portion of the Fuel System that is less than 350mm above the ground must be shielded from front, side and rear impact collisions, by a fully triangulated structure meeting T3.2 or equivalent.

CV2.4 Fuel Lines for Low Pressure Systems

CV2.4.1 [AS CV2.4.1 IN 2027 FORMULA STUDENT RULES V1.0 WITH THE FOLLOWING ADDITION] Barbed fittings or beaded fittings conforming to SAE J1231 are permitted if a hose and clamp connection is used.

CV3 EXHAUST SYSTEM AND NOISE CONTROL

As per 2027 Formula Student Rules V1.0, except:

CV3.1 Exhaust System General

CV3.1.5 The use of rubber mounts directly between the exhaust and exhaust clamp is prohibited for both the exhaust and silencer.

CV4 SHUTDOWN SYSTEM

As per 2027 Formula Student Rules V1.0, except:

CV4.1 Shutdown Circuit

CV4.1.1 [As CV4.1.1 in 2027 Formula Student Rules V1.0 with the following addition] Equivalent solid-state switching devices are permitted instead of mechanical relays.

CV5 LV HYBRID SYSTEM

For FSUK, this section refers to Low Voltage Hybrids only. High Voltage Hybrids are permitted as an AFV. As per 2027 Formula Student Rules V1.0, except:

CV5.1 LV Hybrid System General

CV5.1.9 LV hybrid motors must meet EV2.1 and EV2.2.4.

CV5.1.11 The organisers may require the fitment of an Energy Meter, see EV4.6. The fuel efficiency of any LV hybrid systems may be calculated on a State of Charge (SOC) neutrality basis.

CV5.3 LV Hybrid System Form

CV5.3.1 A LV Hybrid System Form (HSF) must be submitted by the date published in the Key Dates document using the HSF template.

CV5.3.4 The HSF must detail how the system design safely mitigates the risk of the LV hybrid system attempting to accelerate the car from rest, when the accelerator pedal is fully released. An APPS as per T11.8 is an acceptable way to mitigate this risk.

SECTION EV – ELECTRIC VEHICLES

EV5 DEFINITIONS

As per 2027 Formula Student Rules V1.0.

EV6 ELECTRIC POWERTRAIN

As per 2027 Formula Student Rules V1.0, except:

EV6.3 APPS / Brake Pedal Plausibility Check

EV6.3.11 The commanded motor torque must be 0 Nm, if the mechanical brakes are actuated and the APPS, see T11.8, signals pedal travel equivalent to >25% desired motor torque or >5kW, whichever is lower, at the same time, for longer than 500ms.

EV6.3.12 The commanded motor torque must remain at 0Nm until the APPS signals less than 5% pedal travel and 0Nm desired motor torque, regardless of whether the brakes are still actuated or not.

EV7 GENERAL REQUIREMENTS

As per 2027 Formula Student Rules V1.0.

EV4 TRACTIVE SYSTEM

As per 2027 Formula Student Rules V1.0, except:

EV4.1 General Requirements

EV4.1.4 Fans with >50W power must not be connected to the TS.

EV4.2 Tractive System Enclosures

EV4.2.1 Every housing or enclosure containing parts of the TS system, must be labelled with (a) reasonably sized sticker(s) according to "ISO 7010-W012" (triangle with black lightning bolt on yellow background). The sticker must also contain the text "High Voltage" if the voltage is more than 60VDC or 25VAC RMS.

EV4.3 Separation of Traction System and Grounded Low Voltage System

EV4.3.7 [As EV4.3.7 in 2027 Formula Student Rules V1.0 Except the following clarification] Spare boards do not have to be fully assembled.

EV4.4 Positioning of Tractive System Parts

EV4.4.4 In side or front view any part of the TS must not project below the lower surface of the chassis.

EV4.4.5 Additional regulations apply for TS accumulators, see EV5.5.

EV4.5 Tractive System Insulation, Wiring and Conduit

EV4.5.4 TS components and containers must be protected from moisture in the form of rain or puddles to a minimum of IPX2, see IN9.

EV4.5.13 [As EV4.5.13 in 2027 Formula Student Rules V1.0 Except the following clarification] The team must be able to demonstrate that they have assessed the risk of loosening of these connections and describe this and the control methods applied in their ESF.

EV4.5.16 TS connectors outside of TS enclosures must be designed in a way, that the TS cannot be activated, see EV4.11, if connected in any way other than the design intent configuration.

EV4.6 Energy Meter

EV4.6.1 A calibrated Energy Meter will be provided by the officials and must be inserted during competition. The Energy Meter measures TS voltage and TS current.

EV4.6.2 The Datalogger module of the Energy Meter must be in an easily accessible location so that it is possible for the officials to check its operation and insert/remove the memory stick at any time.

EV4.6.3 The Energy Meter must not be installed within the TSAC.

EV4.6.4 All current supplying the TS must run through the Energy Meter. The Energy Meter must be inserted in the negative TS supply between the most negative AIR(s) and the inverters.

EV4.6.5 The TS voltage sense connection of the Energy Meter must be directly connected, see T1.3.1, to the most positive AIR(s) on vehicle side.

EV4.6.6 The Energy Meter LV connection must be supplied from the LVMS. The Energy Meter requires a stable 12V supply, so regulators or voltage converters are permitted if necessary. There should be no switching or relays between the LV source and the Energy Meter.

EV4.6.7 The specification of the Energy Meter will be available on the Formula Student website.

EV4.7 Tractive System Measuring point

EV4.7.3 4mm shrouded banana jacks of rated for 1000 V CAT III or better must be used.

EV4.8 High Voltage Disconnect

EV4.8.2 An untrained person must be able to remove the HVD within 10s when the vehicle is in ready-to-race condition.

EV4.8.3 A dummy connector or similar may be required to restore the system's isolation, see EV4.5. The dummy connector must be green and clearly identifiable to an observer when in use. It must be attached to the push bar, see T1.3.1, if not in use.

EV4.10 Tractive System Active Light

EV4.10.2 The TSAL itself must have a red light, flashing continuously with a frequency between 2 Hz and 5 Hz and a duty cycle of 50%, active when the LVS is active and for at least 15 minutes after the LVS is switched off (see EV4.10.16), and the voltage across any DC-link capacitor exceeds

- 60VDC or 25VACRMS
- Half the nominal TS voltage

whichever is lower.

EV4.10.3 The TSAL itself must have a green light, continuously on, when the LVS is active and for at least 15 minutes after the LVS is switched off (see EV4.10.16), and ALL of the following conditions are true:

- All AIRs are opened.
- The pre-charge relay, see EV5.7.2, is opened.
- The voltage at the vehicle side of the AIRs inside the TSAC does not exceed 60VDC or 25VACRMS.

EV4.10.16 The TSAL power supply must:

- Comply with T11.7 and be capable of powering the TSAL for at least 15 minutes after the LVS has been switched off. It is permissible for the TSAL to be powered by the LVS whenever this is switched on.
- Not be used to power any other systems,
- Comply with all requirements of T11.1 but must not be de-activated by opening the LVMS (see T11.3).

EV4.10.17 It is permissible for the ESO to deactivate the TSAL when the LVS is switched off and if the TS is confirmed to be deactivated.

- It must not be possible to activate the TS if the TSAL is in a deactivated state,
- The driver must not be able to deactivate the TSAL.

EV4.12 Ready-To-Drive Sound

EV4.12.2 The sound level must be a minimum of 80dB(A) and a maximum of 110dB(A), fast weighting. The sound level will be measured with a free-field microphone placed free from obstructions in a radius of 2m around the vehicle.

EV5 TRACTIVE SYSTEM ENERGY STORAGE

As per 2027 Formula Student Rules V1.0, except:

EV5.3 Tractive System Energy Storage – General Requirements

EV5.3.4 [As EV5.3.4 in 2027 Formula Student Rules V1.0 Except the following clarification] For clarity, exceeding any of these limits in isolation is prohibited.

EV5.3.8 Any spare TSAC and/or cells must be identical to those presented and approved at scrutineering.

EV5.3.9 All TS Accumulators using chemistries other than lead acid shall be:

(a) Installed such that emergency responders can effectively direct extinguishing media onto the accumulator without delay or significant obstruction. The arrangement shall:

i. Provide a clearly identifiable means of accessing or directing extinguishing media to the TS accumulator from outside the vehicle, without requiring body panel removal and the with the driver seated in the normal driving position.

ii. Ensure the access point or mechanism is readily visible and recognisable to track marshals and emergency responders approaching the vehicle.

iii. Where a dedicated access point, access port, or other specific interface is required to enable extinguishing media to be directed onto the TS accumulator, its location shall be externally identified using the symbols at Figure 27.

Figure 6: Fire Port marking

iv. Where the accumulator is not immediately adjacent to the access point, provide an effective means of direction extinguishing media from the access location to the accumulator

v. Prevent any access provision from compromising the required separation between the driver compartment and the accumulator system (T4.8).

(b) Identified with the symbol below (minimum height 75mm and showing the appropriate battery chemistry) on each side of the car AND adjacent to any labels required by EV5.3.4(a).

Figure 7: Battery Chemistry marking

EV5.5 Tractive System Energy Storage – Mechanical Configuration

EV5.5.3 [As EV5.5.3 in 2027 Formula Student Rules V1.0 Except the following clarification] Where materials are used within the TSAC which do not meet the requirements of T1.2.1 the team must be able to justify why they were used in preference to a fire-retardant material.

EV5.5.4 [As EV5.5.4 in 2027 Formula Student Rules V1.0 Except the following clarification] Identical requirements but must be documented in SES not ASES.

EV5.5.6 [As EV5.5.6 in 2027 Formula Student Rules V1.0 Except the following clarification] An ASES is not required for FSUK.

EV5.5.8 The TSAC must include electrically insulating internal vertical walls with a minimum of 75% of the height of the external vertical walls.

The accumulator sections, see EV5.1.3, must be separated by a rigid, electrically insulating and fire-retardant barrier, see T1.2.1.

EV5.5.10 [As EV5.5.10 in 2027 Formula Student Rules V1.0 Except the following clarification] Identical requirements but must be documented in SES not ASES.

EV5.5.12 [As EV5.5.12 in 2027 Formula Student Rules V1.0 Except the following clarification] Identical requirements but must be documented in ESF not ASES.

EV5.5.13 [As EV5.5.13 in 2027 Formula Student Rules V1.0 Except the following clarification]

EV5.5.22 [As EV5.5.22 in 2027 Formula Student Rules V1.0 Except the following clarification] The sticker must also contain the text “High Voltage” if the voltage is more than 60VDC or 25VAC RMS.

EV5.5.23 Where there are liquid cooling elements within the accumulator container, teams must demonstrate how they have been designed, manufactured and tested to ensure that cooling liquid cannot leak into the accumulator.

EV5.8 Accumulator Management System

EV5.8.11 [As EV5.8.11 in 2027 Formula Student Rules V1.0 Except the following clarification] Where this is the case, the team must demonstrate that the chosen rating is appropriate for the situation and document this in the ESF.

EV6 EV SHUTDOWN CIRCUIT AND SYSTEMS

As per 2027 Formula Student Rules V1.0, except:

EV6.1 Shutdown Circuit

EV6.1.2 [As EV6.1.2 in 2027 Formula Student Rules V1.0 Except the following clarification] Whilst hardwired interlocks may be located after the TSMS, it is good practice for them to be before the TSMS.

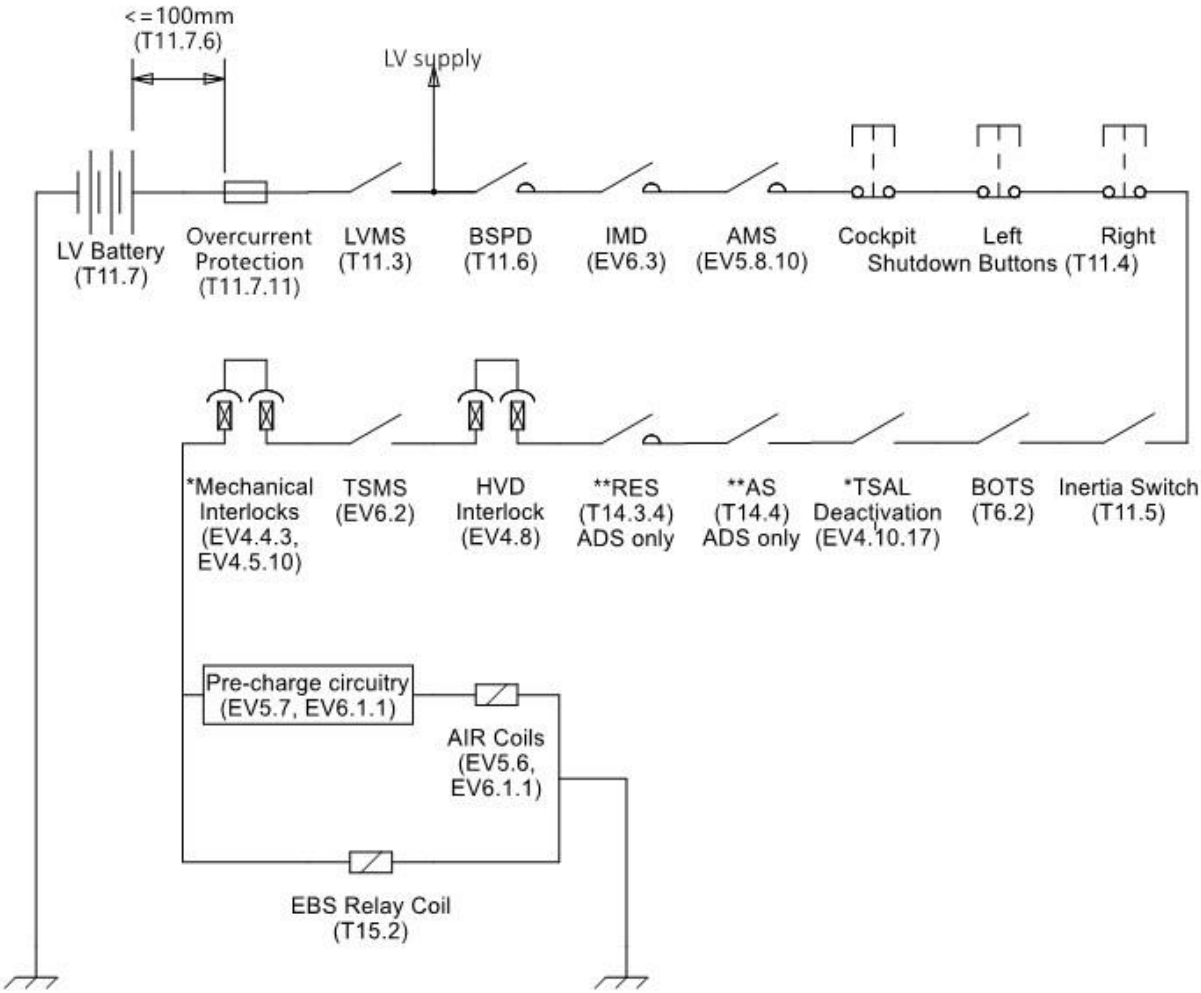

Figure 20: Explanatory example schematic of the required shutdown circuit.
Elements marked ** are only required for ADS.
Elements marked * are required in accordance with the associated rule(s).

EV6.1.5 [As EV6.1.5 in 2027 Formula Student Rules V1.0 Except the following clarification] The voltage in the TS must drop to below 60VDC and 25VAC RMS in less than five seconds.

EV7 CHARGERS

As per 2027 Formula Student Rules V1.0, except:

EV7.1 Chargers General Requirements

EV7.1.9 An easily visible green indicator with the same functionality as the TSAL's green light, see EV4.10.3, must be available.

EV8 TRACTIVE SYSTEM ACCUMULATOR CONTAINER HAND CART

As per 2027 Formula Student Rules V1.0, except:

EV8.1 Tractive System Accumulator Container Hand Cart

EV8.1.11 [AS EV8.1.11 IN 2027 FORMULA STUDENT RULES V1.0 EXCEPT THE FOLLOWING CLARIFICATION] The label must be clearly visible when the TSAC is on the hand cart.

EV9 ELECTRICAL SYSTEM FORM

EV9.1 Electrical System Form

EV9.1.11 Prior to the competition, all teams must submit clearly structured documentation of their entire electrical system (including control and TS) called the ESF.

EV9.1.12 The ESF must follow the template provided on the Formula Student website, must not exceed one hundred and ten (110) pages and be submitted in pdf format. Submissions that do not meet these requirements may be rejected by the judges and considered as a non-submission.

EV9.1.13 Datasheet values and manufacturer recommendations must be adhered to for all items in the ESF, unless prior permission is sought and approved by submitting a rules question to the Formula Student Question Database.

SECTION AFV – ALTERNATIVE FUEL VEHICLES

AFV1 ALTERNATIVE FUEL VEHICLES

AFV1.1 Alternative Fuels and Powertrains Overview

AFV1.1.1 Formula Student would like to promote alternative powertrains and fuels such that vehicles built with alternative powertrains can compete fairly at the competition.

AFV1.1.2 If a team wishes to use an alternative fuel, then the process in AFV1.2 must be followed.

AFV1.1.3 There are additional rules for alternative fuels. It will be necessary to work with the Formula Student Technical Committee to develop a satisfactory design; some of the additional rules are presented in AFV1.3 to AFV1.5.

AFV1.1.4 During the endurance event the fuel efficiency of all vehicles will be measured in terms of the production of CO_2 measured in kg. The quantity of CO_2 released to the atmosphere by the consumption of each allowable fuel is specified in rule D7.9.2 and is intended to represent the UK average number for the type of fuel under consideration.

AFV1.1.5 The fuel efficiency of any AFV using on-board electrical energy storage will be calculated on a State of Charge (SOC) neutrality basis using the Energy Meter described in EV4.6.

AFV1.2 Alternative Fuel Report

AFV1.2.1 Any team intending to submit an alternative fuel entry must submit a short report (5 A4 pages maximum) by the date defined by the Key Dates Document outlining the fuel or combination of fuels that the team intends to use, how the fuel will be transported and stored at the event, details of how the powertrain will work and any possible risks and how these might be mitigated. Subsequent discussions with the Formula Student Technical Committee will determine whether an entry can be accepted and what additional regulations the entry must respect.

AFV1.2.2 Once an alternatively fuelled vehicle's entry is accepted, the team must complete reports equivalent to those required by EVs before the vehicle will be allowed to run at the competition. The judges may request that an FMEA or similar are completed by the team.

AFV1.3 Fuel

AFV1.3.1 The allowable forms of power in addition to those covered by the Formula Student rules (Gasoline, E85 and Electric) are specified as Diesel, Hydrogen, Hydrogen fuel cell and combinations of all the above forms of power to create a hybrid but the organising committee will consider requests for other fuels such as Liquid Petroleum Gas (LPG) and Compressed Natural Gas (CNG) to be added to this list.

AFV1.3.2 Gasoline or E85 fuels from a different supplier, or from the competition's supplier but to a different specification are not permitted.

AFV1.3.3 For alternative powertrains, in addition to the fuel that is available for cars built to the CV rules, the organisers will seek to secure the supply of appropriate fuels to support alternative powertrains, but this cannot currently be guaranteed.

AFV1.3.4 Entrants requiring alternative fuels should have a back-up plan in mind for fuel supply.

AFV1.4 Location and Mounting of Fuel System

AFV1.4.1 Any fuel, compressed gasses, other energy storage media must be contained within the Primary Structure Envelope and when located less than 350mm from the ground must be shielded from front, side or rear impacts with a structure built to T3.2.

AFV1.4.2 Elements of an AFV Fuel System may be required to comply with T3.3.

AFV1.5 Powertrain Limitations

AFV1.5.1 Any alternatively fuelled combustion engine, whether the sole prime mover or part of a hybrid powertrain, must use a reciprocating 4 stroke cycle internal combustion engine with a maximum capacity of 710cc.

AFV1.5.2 The engine can be modified within the restrictions of the rules.

AFV1.5.3 If more than one engine is used, the total displacement cannot exceed the maximum displacement described in AFV1.3.1 and the air for all engines must pass through a single air intake restrictor (see CV1.7, "Intake System Restrictor.")

AFV1.5.4 HV hybrid powertrains utilising on-board energy storage are allowed.

AFV1.5.5 Electric only or hybrid vehicles which use Electric as their prime means of propulsion e.g. electric / hydraulic and series hybrids as well as parallel hybrids are allowed.

AFV1.5.6 Any HV electric hybrid vehicles must follow the EV regulations for the Electrical System unless a change is agreed with the Formula Student Technical Committee.

AFV1.5.7 Any car using a diesel engine with mechanical fuel injection must incorporate a throttle which is mechanically closed when the throttle pedal is released. Diesel engines with electronic fuel injection do not require a throttle if the team follows the principles of the electronic throttle control rules to control and monitor the supply of fuel to the engine and satisfies the technical inspection team that their design is safe.

SECTION IN – TECHNICAL INSPECTIONS

IN1 GENERAL

As per 2027 Formula Student Rules V1.0, except:

IN1.1 Technical Inspection Process

IN1.1.1 The technical inspection is divided into the following parts:

- Motorsport UK Safety Inspection (SAFETY)
- Mechanical Inspection (CHASSIS and TECH)
- [EV Only] Accumulator Inspection (EV BATTERY)
- [EV Only] Electrical Inspection (EV VEHICLE)
- [EV Only] Rain Test
- Noise Test (NOISE)
- Tilt Test (TILT)
- Brake Test (BRAKE)
- Vehicle Weighing
- Driver Egress Tests
- [DV Only] Autonomous Inspection
- [DV Only] EBS Test

IN1.2 General Rules

IN1.2.2 [As IN1.2.2 in 2027 Formula Student Rules V1.0 Except the following clarification] This rule is [DV Only].

IN1.2.4 [As IN1.2.4 in 2027 Formula Student Rules V1.0 Except the following clarification] It must always stay with the vehicle.

IN1.2.15 The event organisers reserve the right to re-inspect the vehicle at any time during the event after passing technical inspection. If any non-compliances are identified, then the team may be disqualified from the run in the dynamic event that immediately preceded the re-inspection.

IN1.3 Technical Inspection Sticker

IN1.3.1 Technical inspection stickers will be placed on the upper nose of the vehicle. Cars must have a clear and unobstructed area at least 125 mm diameter on the upper front surface of the nose along the vehicle centreline, which will be used to record the car weight and identify the sections of scrutineering that have been completed.

IN1.3.2 If a vehicle is no longer in compliance with the rules, the officials will set the vehicle's technical inspection status to fail, remove the respective inspection sticker(s) from the vehicle and note the reason for revoking the technical inspection approval in the technical inspection sheet.

IN1.3.3 Each car will be required to append a sticker on the car 8cm x 8cm, which identifies which drivers have completed which event. The location of the sticker must be on the left-hand side of the car above 350mm from the ground such that the marshals can record the driver's letter on the sticker at each event.

IN2 MOTORSPORT UK SAFETY INSPECTION

IN2.1 Motorsport UK Safety Inspection Objective

IN2.1.1 At the Motorsport UK Safety Inspection the driver's equipment and various aspects of the vehicle are checked for compliance with the rules.

IN2.2 Motorsport UK Safety Inspection Required Items

IN2.2.1 The following items must be presented:

- All helmets,
- All driver's equipment and other safety gear,
- Two unused and in date fire extinguishers,
- The vehicle.

IN3 [EV ONLY] ACCUMULATOR INSPECTION

As per 2027 Formula Student Rules V1.0, except:

IN3.2 Accumulator Inspection Required Items

IN3.2.1 [As IN3.1.1 in 2027 Formula Student Rules V1.0 Except the following clarification] An ASES is not required for FSUK.

IN3.2.2 [As IN3.1.2 in 2027 Formula Student Rules V1.0 Except the following clarification] Multimeter with protected probe tips and two 4mm banana plug test leads must be rated for 1000V CAT III or better.

IN4 [EV ONLY] ELECTRICAL INSPECTION

As per 2027 Formula Student Rules V1.0, except:

IN4.2 Electrical Inspection Required Items (IN4.2)

IN4.2.1 [As IN4.2.1 in 2027 Formula Student Rules V1.0 Except the following clarification] The following additional items must be presented at electrical inspection:

- Stands (as per T13.2.2)
- Equipment needed for the brake light check for regenerative braking, see T6.3.1,

IN5 MECHANICAL INSPECTION

As per 2027 Formula Student Rules V1.0, except:

IN5.1 Mechanical Inspection Required Items

IN5.1.1 [As IN5.1.1 in 2027 Formula Student Rules V1.0 Except the following clarification] The following additional items must be presented at mechanical inspection:

- The vehicle fitted with tyres for dry conditions,
- Stands (as per T13.2.2),
- Data sheets for the headrest foam, LV Battery(s) and any other item with a material specification required by the rules,
- Photographic evidence demonstrating that the chassis is new for the year of entry.

IN6 [DV ONLY] AUTONOMOUS SYSTEM INSPECTION

As per 2027 Formula Student Rules V1.0, except:

IN6.1 Autonomous System Inspection EBS Test (IN6.2)

IN6.1.2 The EBS performance will be tested dynamically and must demonstrate the performance described in T15.4.

IN6.1.3 The test will be performed in a straight line marked with cones similar to acceleration.

IN6.1.4 During the brake test, the vehicle must accelerate in autonomous mode up to at least 40km/h within 20m. From the point where the RES is triggered, the vehicle must come to a safe stop within a maximum distance of 10m.

IN6.1.5 In case of wet track conditions, the stopping distance will be scaled by the officials dependent on the friction level of the track.

IN6.1.6 The EBS test is conducted after all other elements of IN11 have been passed.

IN7 TILT TEST

As per 2027 Formula Student Rules V1.0.

IN8 VEHICLE WEIGHING

As per 2027 Formula Student Rules V1.0.

IN9 [EV ONLY] RAIN TEST

As per 2027 Formula Student Rules V1.0, except:

IN9.1 Rain Test General Definitions

IN9.1.2 Prior to commencing the rain test the team must present their procedures (as described in the EV Safety Protocols document) for investigating an IMD activation to the satisfaction of the scrutineers.

IN10 NOISE TEST

As per 2027 Formula Student Rules V1.0, except:

IN10.2 Noise Test Procedure [EV ONLY]

IN10.2.1 The ready-to-drive sound level will be measured during a static test.

IN10.2.2 Measurements will be made with a free-field microphone placed free from obstructions in a radius of 2m around the vehicle.

IN11 BRAKE TEST

As per 2027 Formula Student Rules V1.0, except:

IN11.1 Brake Test Procedure

IN11.1.3 [As IN11.1.3 in 2027 Formula Student Rules V1.0 Except the following clarification] It is acceptable for the TSAL to switch to green shortly after the vehicle has come to a complete stop as the reduction of the system voltage may take up to 5s.

IN12 POST EVENT INSPECTION

As per 2027 Formula Student Rules V1.0, except:

IN12.1 Post Event Inspection Procedure

IN12.1.4 [As IN12.1.4 in 2027 Formula Student Rules V1.0 Except the following clarification] Penalties at FSUK are as follows:

	Acceleration	Skidpad	Autocross	Endurance	Trackdrive
Group A	0.3s	0.3s	2s	30s	30s
Group B	1s	1s	5s	2min	2min

Table 3: Post Event Inspection Penalties

The penalty applies to all runs since the vehicle entered the dynamic area the last time.

IN13 DRIVER EGRESS TEST

IN13.1 Driver Egress Test Objectives

IN13.1.1 All of the drivers will be tested to prove they meet the requirements of:

- T4.3.1 – Minimum Helmet Clearance,
- T5 – Driver Restraint System.

IN13.2 Driver Egress Test Procedure

IN13.2.1 The vehicle must have passed SAFETY, CHASSIS, TECH, [EV ONLY] EV BATTERY, [EV ONLY] EV VEHICLE and [EV ONLY] RAIN TEST before attempting the Driver Egress Test.

IN13.2.2 A Driver Egress Test will be completed for the tallest driver only at first to allow the vehicle to attempt the later stages of Inspection.

IN13.2.3 When all other aspects of Inspection are passed the remaining drivers can be tested.

IN13.2.4 The following vehicle and driver with helmet, gloves and shoes must be presented at the Driver Egress Test.

IN13.2.5 The three other team members allowed in the Inspection Area must strap the driver into the car in the normal driving position and make any required adjustments to the Driver Restraint System (harnesses and head restraint).

IN13.2.6 If there are any non-compliances, these will be noted and must be corrected before the driver is allowed to attempt the Driver Egress Test.

IN13.2.7 All drivers must be able to exit to the side of the vehicle in no more than 5 seconds. Egress time begins with the driver in the fully seated position, hands in driving position on the connected steering wheel and wearing the required driver equipment. Egress time will stop when the driver has both feet on the ground.

IN13.2.8 Any driver communication devices must be present and connected during the egress test to demonstrate the requirements of T13.3.13.

SECTION S – STATIC EVENTS

S1 STATIC EVENT NO-SHOW PENALTY

S1.1.1 Where a team fails to notify officials, by the date and time specified in the competition handbook, that they are unable to attend their scheduled static event session, the organisers shall apply a points penalty of a maximum of (negative) 100 points per absent notification.

This will be applied to a team's overall event score. For the avoidance of doubt, this is additional to any specified penalty applicable for non-attendance at a scheduled static event session.

This penalty may be waived if extenuating circumstances are presented to and accepted by the officials.

S2 BUSINESS PLAN PRESENTATION (BPP) – FS CLASS AND CONCEPT CLASS

S2.1 Business Plan Presentation Objective

S2.1.1 The objective of the FSUK BPP is to assess the team's ability to develop and to present a comprehensive business model. This business model must offer a product based on the team's specific prototype vehicle or a core component of it, providing a rewarding business opportunity that creates a monetary profit. The vehicle or component must be an essential part of the value proposition.

S2.1.2 The quality of the actual prototype vehicle will not be considered as part of the BPP judging therefore, Formula Student Class and Concept Class teams compete directly against each other in this event.

S2.1.3 The Business presentations must consider a "special condition" set prior to the event.

S2.2 Business Presentation Schedule

S2.2.1 The Business Plan Presentation Judging will take place in two parts:

- Initial judging of all teams,
- Final judging of up to the 5 top teams. Qualifying teams will be notified in advance of the final.

S2.2.2 Initial judging of Business Presentations will be made on the static events days. Presentation times will be published in the event schedule. Teams are reminded that the Business Presentations will be held in the Business Presentation judging rooms, NOT at your display area.

S2.2.3 All initial judging sessions may be recorded by the BPP judging and presenting teams. All audio and visual recording equipment must be removed from the judging room at the end of the Q&A.

S2.2.4 Teams arriving more than eleven (11) minutes late to their assigned BPP judging slot will be deemed to have missed their assigned time period.

S2.3 Business Plan Presentation Format

S2.3.1 The BPP judging format is as follows:

- 10 minute BPP presentation
- 5 minute Q&A
- 5-10 minute Judges' feedback

S2.3.2 One or more team members may participate in the presentation.

S2.3.3 Team members who are part of the "presentation group" must be introduced and may answer the judge's questions in the Q&A even if they did not speak during the presentation itself.

S2.3.4 Presentations are limited to a maximum of ten (10) minutes. Penalties will be imposed if the presentation is less than nine (9) minutes or exceeds eleven (11) minutes. The Judges will stop any presentation exceeding eleven (11) minutes.

S2.3.5 The BPP event is a role play and teams should present themselves as employees of a company rather than as students.

S2.3.6 The judges should be treated as if they were potential investors or partners for the presented business model.

S2.3.7 The format of the final judging only includes the presentation and Questions & Answers. The "presentation group" for the final must consist of the same team members as the initial judging.

S2.3.8 The following equipment will be supplied by FSUK in the judging rooms for teams to use:

- Digital Screen / Video Projector
- HDMI (type A) connection (Type C connection will not be provided)
- UK Power Socket

S2.3.9 Access to an internet connection during the initial or final judging will not be supplied.

S2.4 Evaluation Criteria

S2.4.1 Teams must present a BPP which covers the following topics as a minimum:

- The potential customers,
- How the business will be marketed,
- The development and production proposal of the vehicle or component,
- The business financial proposition,
- The Special Condition.

S2.4.2 Content marks will only be awarded for the information presented to the judges. Printed material to support this is allowable but must:

- Be referred to within the presentation,
- Be limited to a maximum of eight (8) sides of A4 paper. Decorative covers are excluded from this page count.

S2.5 Scoring Formula

S2.5.1 To ensure judging allows an acceptable separation between teams, the BPP event is marked out of 460 marks – please note: this number may change due to modifications of the marking scheme between the rules being published and the competition taking place, but any changes will be consistent to all teams. A team's mark out of 460 will be converted into a maximum of one hundred and fifteen (115) points that count towards the Formula Student competition as described below.

S2.5.2 Up to 5 teams will be invited to participate in the BPP final, finalists will be required to deliver their presentation live to a single judging panel. The presentation must not be changed from the initial judging and must be delivered by the same members of the "presentation group". Points will be allocated to top six teams will be as shown in Table 4 below.

<table>
<tr><th rowspan="2">Teams in Final</th><th colspan="6">Points assigned</th></tr>
<tr><th>1st</th><th>2nd</th><th>3rd</th><th>4th</th><th>5th</th><th>6th</th></tr>
<tr><td>2</td><td rowspan="4">115</td><td rowspan="4">105</td><td>103*</td><td>pro-rata</td><td>pro-rata</td><td>pro-rata</td></tr>
<tr><td>3</td><td rowspan="3">103</td><td>101*</td><td>pro-rata</td><td>pro-rata</td></tr>
<tr><td>4</td><td rowspan="2">101</td><td>100*</td><td>pro-rata</td></tr>
<tr><td>5</td><td>100</td><td>99*</td></tr>
</table>

Table 4: BPP Finalist Scores

S2.5.3 The BPP scores for non-finalists will be normalised and awarded on a pro-rata basis using the following formula:

$$BUSINESS\ PLAN\ PRESENTATION\ SCORE = HFNS\left(\frac{P_{your}}{P_{max}}\right)$$

Where:

- HNFS is the highest non-finalist score (as indicated with a *) shown in Table 2,
- P_{max} is the mark achieved out of 460 by the highest non-finalist,
- P_{your} is the mark achieved out of 460 by your team.

S2.5.4 The BPP Event Captain may at their discretion; normalise the scores of different judging teams.

S3 COST AND MANUFACTURING EVENT – FORMULA STUDENT CLASS

S3.1 Cost and Manufacturing Objective

S3.1.1 The objective of the cost and manufacturing event is to evaluate the team's understanding of the manufacturing processes, costs and greenhouse gas emissions associated with the construction of a prototype race car. This includes trade off decisions between content and cost, make or buy decisions and understanding the differences between prototype and mass production.

S3.2 Cost and Manufacturing Procedure

S3.2.1 Prior to the competition, three Cost Report Documents (CRD) (see S3.3) must be submitted to the competition website by the deadline specified on the website.

S3.2.2 During the competition, a discussion with the judges will take place, next to the team's vehicle. The discussion is split into three parts:

S3.2.3 Part 1 "CRD Discussion":

A discussion to evaluate the team's ability to prepare an accurate engineering and manufacturing BOM for the complete vehicle. The team must prove the following:

- The specification of the vehicle in the CRD accurately reflects the vehicle brought to the competition,
- The costs and emissions within the Costed Carbonised Bill of Material (CCBOM) (part of the BOM) are correct and realistic,
- The manufacturing feasibility of the vehicle.

S3.2.4 Part 2 "Cost Understanding":

A discussion to evaluate the general cost and manufacturing knowledge of the team.

S3.2.5 Part 3 "Real Case":

A specific task to evaluate the Cost and Manufacturing knowledge in a certain field. The real case task is published on the competition website before the event. The Real Case should not be submitted prior to the event.

S3.2.6 The teams must present their vehicle at the designated time to the judges. Teams that miss their time slot will lose all points for the cost event.

S3.2.7 Teams are allowed to bring electronic, handwritten, or printed handouts, flip charts, or similar to the event, but the space available may be limited.

S3.3 Cost Report Documents

S3.3.1 The CRD consists of the following documents:

- The Bill of Material file (BOM), including Costed Carbonised BOM, uploaded as a PDF in A4 landscape format
- The Supporting Material file uploaded as a PDF in A4 portrait format
- The Cost & Emissions Explanation file uploaded as a PDF in A4 portrait format

S3.3.2 Changes to the CRD will not be permitted after the deadline.

S3.3.3 A changelog of the changes on the vehicle since the submission deadline of the CRD can be presented to the judges at the BOM discussion as a separate document. Missing parts of the BOM cannot be part of the changelog.

S3.3.4 All CRD must be brought as a hard copy to the event and must match exactly the submitted documents. A minimum of one hard copy is required, extra copies may be presented digitally.

S3.3.5 The BOM shall be created utilising the online BOM tool, any other format will not be scored. The website tool will provide a printable pdf version of the BOM. It is permissible to use the Formula Student cost tool and submissions in this format will not be penalised.

S3.3.6 At least one hard copy must be in a ring binder with DIN A4 pages (or similar).

S3.3.7 The team must ensure that at least two judges are able to review the CRD independently.

S3.3.8 The presented CRD must be identical with the uploaded versions, with deviations allowed under S3.3.3, otherwise five penalty points will be deducted from the team's cost event score.

S3.4 Bill of Materials

S3.4.1 The BOM is a sorted list for every vehicle part.

S3.4.2 The BOM must list all parts and equipment fitted to the prototype vehicle at any time during the competition.

S3.4.3 The BOM is structured as follows:

- The BOM is broken down into "systems" (see S3.4.6), which are defined by the website tool,
- Each "system" is broken down into "assemblies", which are defined by the website tool,
- Each "assembly" can optionally be broken down into "sub-assemblies", which must be defined by the team,
- Each "assembly" or "sub-assembly" is broken down into "parts", which must be defined by the team.

S3.4.4 "Fasteners" are additional items necessary to assemble to "part", "sub-assembly" or "assembly" and should not be listed, other than where required by S3.5.4.

S3.4.5 A self-manufactured "fastener" is considered a "part".

S3.4.6 The "systems" are:

- Brake System,
- Chassis and Body,
- Drivetrain,
- Engine and Tractive System,

- Grounded Low Voltage System,
- Miscellaneous, Fit and Finish,
- Steering System,
- Suspension System,
- Wheels, Wheel Bearings and Tyres,
- [DV ONLY] Autonomous system.

S3.4.7 When adding "parts" to the BOM, the comments section should be reviewed thoroughly. The chosen part name must clearly describe what is included. For example, if a spring is included, the "part" should not be called "damper".

S3.4.8 Only metric units must be used within the BOM.

S3.4.9 Only dry tyres and wheels need to be included and must be mounted on the vehicle during judging.

S3.5 Costed Carbonised Bill of Material

S3.5.1 The manufacturing processes of all parts from one or two BOM systems, specified prior to the event, must be listed in the CCBOM.

S3.5.2 For 2027, a CCBOM for the "Grounded Low Voltage System" and "Chassis and Body" must be submitted.

S3.5.3 Additional to the BOM, the CCBOM must:

- Include the actual associated manufacturing processes for each part as used for the prototype vehicle,
- Include tooling (e.g. welding jigs, moulds, patterns and dies),
- Include the actual costs of materials, fabrication, bought parts, and assembly for each part as used for the prototype vehicle.
- Include the system's carbon footprint for each part, manufacturing process, and assembly process of the prototype vehicle in carbon dioxide equivalents (CO_2e) in kg.

S3.5.4 Additional to the structure of the BOM, in the CCBOM, each "part" is broken down into:

- "materials" used
- "processes" that describe the necessary steps for manufacturing
- "fasteners" used to assemble the part
- "tooling" required for the manufacturing

S3.5.5 Each constituent "part" of an "assembly" must be classified as "bought" or "made".

S3.5.6 Only parts that can be bought from a catalogue may be designated as "bought".

S3.5.7 For each "bought" "part", if the part was modified, the associated processes for this modification must be included.

S3.5.8 For each "made" "part" the raw material, all production processes, fasteners, and all required tooling must be included.

S3.5.9 The cost calculations must include the costs of materials, fabrication, bought parts, and assembly to the vehicle, and must be completed as realistically as possible.

S3.5.10 The cost calculations must exclude research, development and capital expenditures for real estates (e.g. plant or development hours of the team).

S3.5.11 All costs must be displayed in EUR. For calculating the prices in EUR from other currencies, the team must provide the exchange rates used.

S3.5.12 There is no maximum cost. Receipts are not required for any items.

S3.5.13 The costs of hand or power tools must not be included.

S3.5.14 The estimations for machining rates, hourly rates, included overheads etc. must be shown.

S3.5.15 The "carbon footprint" is calculated in CO_2e based on a "Cradle-to-Gate" Life Cycle Assessment of the selected "system(s)".

S3.5.16 The "Cradle-to-Gate" analysis includes extraction of raw materials, manufacturing of "made" "parts", "sub-assemblies", and "assemblies", as well as manufacturing of the "system".

S3.5.17 For "bought" "parts", only the "carbon footprint" of the modifications must be included.

S3.5.18 The "carbon footprint" for the transportation between steps must be included.

S3.5.19 The "carbon footprint" must exclude research and development.

S3.6 Supporting Material File

S3.6.1 The Supporting Material File is a document containing additional information which allows the judges to understand the BOM. It should include drawings, exploded view drawings and/or pictures of the vehicle and the parts included in the BOM.

S3.7 Cost & Emissions Explanation File

S3.7.1 The Cost & Emissions Explanation File is a document containing additional explanations which allow the judges to understand the costs and greenhouse gas emissions within the CCBOM part of the BOM.

S3.7.2 The Cost & Emissions Explanation File should point out which cost model was used, and which types of costs are included. It should also contain which specific cost figures were used, e.g. the cost of one machine operation hour.

S3.7.3 The methodology used for determining the Global Warming Potential (GWP) in CO_2e must be explained. The specific carbon emission factors associated with each CCBOM entry must be included.

S3.7.4 The Cost & Emissions Explanation File must not exceed 50 pages, inclusive of all covers, contents pages, and appendices.

S3.8 Cost and Manufacturing Vehicle Condition

S3.8.1 Vehicles must be presented for cost and manufacturing judging in finished condition, fully assembled, complete, ready-to-race and with its dry tyres mounted.

S3.8.2 The judges may not evaluate any vehicle, that is presented at the cost and manufacturing event, in what they consider to be an unfinished state and may apply a penalty in line with standard tariff (e.g. not attending Cost Judging session or a documentation fault).

S3.8.3 Vehicles may be presented for judging without having passed technical inspection, even if final tuning and setup is in progress.

S3.8.4 Covers and/or parts may be removed during the judging to facilitate access and presentation of components or concepts.

S3.8.5 [EV ONLY] Only sealed TSACs which passed the accumulator inspection may be presented or mounted in the vehicle. They must not be opened.

S3.8.6 [IC ONLY] Only cars that have successfully pass the Tilt Test may be fuelled during the event.

S3.9 Cost and Manufacturing Scoring

S3.9.1 The cost and manufacturing event will be evaluated on the categories specified in the following table:

Category	Points
Content and Completeness of the BOM	20
Cost Estimation realism and understanding	40
Carbon Footprint Estimation realism and understanding	20
Real Case	25
Cost Final	10
Total	115

Table 5: FS Class Cost event scoring

S3.9.2 If items are missing from the BOM, points are deducted and reported up to a maximum -100 points:

Missing Item	Points
Assembly	−5
Part	−3
Process/Material	−1

Table 6: Cost event BOM penalties

S3.9.3 A number of top teams will be chosen to participate in the Cost and Manufacturing finals to determine the Cost and Manufacturing Event winner. The Cost and Manufacturing finals will be held separately from the initial judging and teams will be informed about their participation during the event.

S3.9.4 The scoring for the non-finalist is calculated as followed:

$$COST\ SCORE = 105\left(\frac{P_{team}}{P_{max}}\right)$$

- P_{team} is the score awarded to the team,
- P_{max} is the highest score awarded to any team not participating in the finals.

S3.9.5 The scoring of the cost and manufacturing finalists will vary from 115 to 105 points.

S3.9.6 The maximum penalty for the Cost and Manufacturing Event is capped at 115 penalty points.

S3.9.7 Teams that submit incorrectly formatted documentation, completed not as prescribed or one of the three required pieces of documentation is missing from the upload/submission may be subject to a penalty of up to 30 points per failed document on top of any late penalties incurred.

S3.9.8 Teams that submit their Cost Report Documents after the Final Deadline published in the Key Dates document are expected to attend the Cost event with the correct documentation for judging. Failure to supply documentation at your cost judging slot will result in penalties in line with S3.8.2 in addition to those received for missing the Final Deadline.

S4 COST AND MANUFACTURING EVENT – CONCEPT CLASS

S4.1 Cost and Manufacturing Objective

S4.1.1 The objective of the cost and manufacturing event is to evaluate the team's understanding of the manufacturing processes costs, and greenhouse gas emissions associated with the construction of a theoretical prototype race car. This includes trade off decisions between content and cost, make or buy decisions and understanding the differences between prototype and mass production.

S4.2 Cost and Manufacturing Procedure

S4.2.1 Prior to the competition, three Cost Report Documents (CRD) must be submitted to the competition website by the deadline specified on the website.

S4.2.2 During the competition, a 30 min discussion with the judges will take place. Followed by a 10 - 15-minute presentation by the team on the real-world task.

S4.2.3 The discussion is split into two parts:

- Part 1 "CRD Discussion":
- A discussion to evaluate the team's ability to prepare an accurate engineering and manufacturing Costed Carbonised Bill of Material (CCBOM), evaluating both for correctness and manufacturing feasibility.
- Part 2 "Cost Understanding":
- A discussion to evaluate the general cost and manufacturing knowledge of the team.

S4.2.4 The teams must present their CRD at the designated time to the judges. Teams that miss their time slot will lose all cost points for that day.

S4.2.5 **Real World Task.** Details will be announced to the teams early in 2027 relating to what this task will be.

S4.3 Cost Report Documents (CRD)

S4.3.1 The CRD shall be as per S3.3 to S3.7, with the exception being S3.5.1. For Concept Class, the section shall be Chassis and Body.

S4.3.2 **Cost and Manufacturing Scoring**

S4.3.3 The cost and manufacturing event will be evaluated on the categories specified in the following table:

Category	Points
Content and Completeness of the CCBOM	20
Realism of Cost Estimation	30
Realism of Carbon Footprint Estimation	15
Cost Understanding	45
Real world task	30
Cost Final	10
Total	150

Table 7: Concept Class Cost event scoring

S4.3.4 Teams that submit incorrectly formatted documentation, completed not as prescribed or one of the three required pieces of documentation is missing from the upload/submission may be subject to a penalty of up to 30 points per failed document on top of any late penalties incurred.

S4.3.5 A maximum of four top teams will be chosen to participate in the cost and manufacturing finals to determine the Concept Class cost and manufacturing event winner. The cost and manufacturing finals will be held separately from the initial judging and teams will be informed about their participation during the event.

S4.3.6 The scoring for the non-finalist is calculated as followed:

$$COST\ SCORE = 140\left(\frac{P_{team}}{P_{max}}\right)$$

- P_{team} is the score awarded to the team,
- P_{max} is the highest score awarded to any team not participating in the finals.

S4.3.7 The scoring of the cost and manufacturing finalists will vary from 140 to 150 points.

S5 ENGINEERING DESIGN EVENT – FORMULA STUDENT CLASS

S5.1 Engineering Design Objective

S5.1.1 The concept of the design event is to evaluate the student's engineering process, understanding and effort that went into the design of a vehicle, meeting the intent of the competition.

S5.1.2 Proprietary components and systems that are incorporated into the vehicle design as finished items are not evaluated as a student designed unit but are only assessed on the team's selection and application of that unit.

S5.2 Engineering Design Report (EDR)

S5.2.1 The EDR should contain a brief description of the overall vehicle with a review and derivation of the team's design objectives. Any information to scope, explain or highlight design features, concepts, methods or objectives to express the value and performance of the vehicle to the judges shall be included at the teams' discretion.

S5.2.2 The EDR must not exceed eight (8) pages, consisting of not more than five (5) pages of content (text, which may include pictures and graphs) and three pages of drawings.

TIP: Do not use newspaper style twin columns of text or wrap text around images or graphs as reading and evaluating such Reports is hard for Judges using a laptop.

S5.2.3 The three EDR drawings (no renderings) must show the vehicle from the front, the top and the side. Each drawing must appear on a separate page.

S5.2.4 Any measures to facilitate reviewing the drawings (e.g. measurements, details, colours) may be utilized at the teams' discretion.

S5.2.5 Any portions of the EDR that exceeds five pages of content and/or three pages of drawings will not be evaluated.

S5.2.6 If included, cover sheets and tables of contents will count as text pages.

S5.2.7 The EDR shall be used to sort the teams into appropriate Design Judging Groups based on the quality of the information and understanding of the event objectives contained in the Report.

S5.2.8 Evidence of information mentioned in the EDR should be brought to the competition and be available, on request, for review by the judges.

S5.3 Design Spec Sheet

S5.3.1 A completed DSS must be submitted online on the competition website.

S5.4 Engineering Design Procedure

S5.4.1 The design event starts with the submission of the DSS and the EDR and their review respectively.

S5.4.2 At the competition, teams will present their knowledge and their vehicle to the judges, who will evaluate the teams' performance following the design objectives stated in S5.1.

S5.4.3 Some teams may be chosen to participate in a Design Final to determine the Engineering Design event winner. The Design Final will be held separately from the initial judging and teams will be informed about their participation during the event.

To be considered for the Design Final, the vehicle must have passed all elements of scrutineering. In exceptional circumstances the Organisers may relax this requirement so long as it is applied equitably across all potential Design Finalists.

Teams may bring any photographs, drawings, charts, spare parts or other material that they believe are supportive to the design event, but the space provided for design judging may be limited.

S5.4.4 [EV ONLY] Only sealed TSACs which passed the accumulator inspection may be presented or mounted in the vehicle. They must not be opened.

S5.4.5 [IC ONLY] Only cars that have successfully passed the Tilt Test may be fuelled during the event.

S5.5 Engineering Design Vehicle Condition

S5.5.1 Vehicles must be presented for design judging in finished condition, fully assembled, complete and ready-to-race.

S5.5.2 The judges may not evaluate any vehicle that is presented at the design event in what they consider to be an unfinished state, and may, at their sole discretion, award a substantially reduced score for the entire design event.

S5.5.3 Vehicles may be presented for design judging without having passed technical inspection, even if final tuning and setup is in progress.

S5.5.4 Covers and/or parts may be removed during the design judging to facilitate access and presentation of components or concepts.

S5.6 Engineering Design Judging Criteria

S5.6.1 The judges shall inspect the vehicle and discuss the vehicle design with the team to determine if the design concepts are adequate and appropriate for the application (relative to the objectives set forth in the rules). The judges may sit in the vehicle to ascertain the ergonomics and the driver environment.

S5.6.2 The judges may deduct points if the team cannot adequately explain the engineering and construction of the vehicle.

S5.7 Engineering Design Scoring

S5.7.1 The overall engineering design event maximum scoring is 150 points for FS Class.

S5.7.2 Up to 50 penalty points may be given to teams that demonstrate a fundamental lack of engineering knowledge and are unable to provide justification for their designs, including the use of ‘carry-over parts’ from previous competition vehicles.

The Universal Design Judging Score Sheet for both FS and Concept Class will be available at:

https://www.imeche.org/events/formula-student/team-information/forms-and-documents

S6 ENGINEERING DESIGN EVENT – CONCEPT CLASS

S6.1.1 The concept of the design event is to evaluate the student's engineering process, understanding and effort that went into the design of a vehicle, meeting the intent of the competition.

S6.1.2 The maximum points awarded for the Concept Class Engineering Design Event are 150 points.

S6.1.3 Prior to the event, teams will submit an Engineering Design Report and Engineering Design Spec Sheet. These documents should reflect the current state of development of the designs and outline plans for resolution of outstanding issues/manufacture. As per the Formula Student regulations, late submission of documents will be penalised. For the Engineering Design event documents, penalties will be awarded as per Formula Student but note that Concept Class entrants are not required to submit an Impact Attenuator Report. The requirement for pre-judging submissions of individual Score Sheet Category presentations may be added. If required, teams will be informed via email and the Key Dates spreadsheet will be updated. We aim to inform teams of this requirement no later than April for a June submission deadline.

S6.1.4 Understanding that the vehicle design/manufacture is incomplete, i.e. a non-running vehicle, the judges will be looking at the project planning as well as the design process and will be looking to see evidence of understanding of proposed manufacturing methods and their implications (e.g. costs, tooling requirements, etc).

S6.1.5 Judges expect to see proof of reasoning for key design and concept choice decisions. Given that Formula Student accommodates alternative powertrain technology possibilities it is expected that teams will outline their basic conceptual choice in this regard in some detail. In recognition of the "real world" it is further expected that teams will consider fully the costs of manufacture, service and safety of innovative design choices in addition to the usual parameters of mass and performance and customer appeal. You should note that there is an increased link between the information provided to Cost & Manufacturing, Engineering Design and Business Plan Presentation static event judges.

S6.1.6 Although the Concept Class does not require manufacture of a vehicle, and may be judged online, it is in your interests to have manufactured or procured some real parts before the competition. You will be able to then demonstrate greater understanding of how you progress from "paper" to "part".

S6.1.7 Points will be awarded according to the Universal Engineering Design Scoring Sheet. https://www.imeche.org/events/formula-student/team-information/forms-and-documents.

S6.1.8 There is no Design Final for Concept Class entrants: the only potential exception is if under "force majeure" the Organisers decide to run a fully virtual/online event where all entries effectively become Concept Class. All entries will be notified in such circumstances.

S7 LAP TIME SIMULATION (LTS)

IPG Automotive provides virtual test-driving software, hardware and web application tools to the automotive industry, which enables early testing of designs to ensure design confidence prior to physical build and enables data driven Conceptual Design choices to be made.

The Lap Time Simulation event was created to help students get started with using virtual test-driving software (CarMaker) and to provide less experienced teams with a baseline vehicle to adapt to match their intended vehicle.

The 2027 virtual vehicles, parameter sets and full IPG simulation competition documentation and rules will be released by the deadline in the Key Dates document on the FS website.

Teams are reminded that they may register for their free CarMaker license at any time to familiarise themselves with how to use the software package.

S7.1 Software and User Documentation

S7.1.1 All CarMaker license requests must be submitted no later than 8 weeks before the final submission deadline published in the Key Dates document on the FS website.

It is not guaranteed that IPG Automotive will process your requests after this date, which may prevent your team from participating in the LTS event. It is recommended teams submit their requests well in advance of the deadlines above.

S7.1.2 Registration for LTS requires the three steps to be completed at the links below:

- Register your team for the Formula CarMaker program:

  https://ipg-automotive.com/en/company/research-teaching/registration-formula-carmaker/

- Register for a Formula CarMaker license:

  https://ipg-automotive.com/en/support/licenses/formula-carmaker/

S7.1.3 The CarMaker software and the Formula CarMaker package can be downloaded from the Formula CarMaker customer area on the IPG Automotive website:

https://ipg-automotive.com/en/support/customer-area/

Log in credentials will be provided with your Formula CarMaker license file.

S7.1.4 A Formula CarMaker tutorial can be found within the "FCM Tutorial" folder in the install directory file path:

…\formula-carmaker-R022.1\FCM_Tutorial

Support is also available on the IPG Automotive forum:

https://forums.ipg-automotive.com/ and by email as per S7.1.8.

S7.1.5 A User Guide document is available to download on the Formula Student website.

S7.1.6 It is recommended that teams review the previous LTS webinars available here:

LTS Webinar Playlist

S7.1.7 Upon the start of the LTS event, there will be a 4-week window where the software may be updated in response to any bugs flagged by teams. There will be no updates to the software after this 4-week window unless any critical issues are identified.

S7.1.8 Any requests for support for questions not captured in the tutorials, webinars or documentation, or to flag a potential bug should be sent by email with **"FS LTS" in the Subject Line** to: FormulaCarMaker@ipg-automotive.com

Please ensure you provide sufficient detail for the support team to understand and recreate the problem(s) you are facing.

S7.2 Event Format and Scoring

S7.2.1 The LTS event aims to simulate the real-world scenario where you "the team" are using LTS to evaluate the relative performance of different Formula Student powertrains, aerodynamics and suspension options.

The event consists of three elements for FS Class and four major elements for Concept Class:

- LTS Vehicle Evaluation – completed using the CarMaker software and LTS specific download files, this element is administered by IPG Automotive.

  Any questions on this element should be raised by sending an email with **"FS LTS" in the Subject Line** to: FormulaCarMaker@ipg-automotive.com

- LTS Vehicle Evaluation Report – a short report submission, this element is administered by the IMechE.

- Model Validation Test Plan – a short report submission, this element is administered by the IMechE.

  Any questions on this element should be raised on the FSQD (See Rule A3.6)

- [Concept Class Only] Virtual Dynamics – Running your developed vehicle from the LTS Vehicle Evaluation element in a Driver In the Loop (DIL) environment on-site at the competition.

S7.2.2 The LTS event is a stand-alone competition and does not require any relation to the team's FS Class or Concept Class vehicle.

S7.2.3 Submission deadlines and associated lateness penalties are detailed in the Key Dates document on the Formula Student website.

S7.2.4 Any incomplete submissions will be treated as non-submissions and attract lateness penalties as per the Key Dates document.

S7.2.5 Teams are reminded that Rule A4.2.1 applies to the LTS Event. FS Class and Concept Class teams from the same university are classed as separate teams. Any suspicion of collaboration will be investigated and may result in both teams being disqualified.

S7.2.6 The maximum possible event scores for FS Class and Concept Class are:

	FS Class	Concept Class
LTS Vehicle Evaluation	10 points	30 points
LTS Vehicle Evaluation Report	5 points	10 points
Virtual Dynamics	N/A	30 points
Model Validation Test Plan	5 points	10 points
Total	**20 points**	**80 points**

Table 8: LTS Scoring

S7.2.7 The main "LTS Vehicle Evaluation" task requires teams to develop a single optimal setup from the matrix of possible vehicle and parameter combinations, deriving a vehicle configuration that achieves the highest combined event score for simulated Acceleration, Skid-Pad and Sprint events.

Please see the "LTS Competition Documentation" for full details and limits for the tuneable parameters, with the release date found in the Key Dates document.

S7.2.8 The maximum points available for each simulated event will be as per the FS rules:

- Acceleration – 75 points
- Skid-Pad – 75 points
- Sprint – 100 points

The scoring for each of these events will be identical to those used in the real-world dynamic events, please see Part D1 of this Rulebook for details

S7.2.9 The number of simulation iterations is unlimited, but only one final vehicle parameter set must be submitted as defined in the Key Dates document.

S7.2.10 All submissions will be checked to ensure they comply with the restrictions detailed in the CarMaker software and User Documentation. Any submission that deviates from these will result in disqualification and zero points will be scored for each of the affected events.

S7.2.11 [Concept Class only] Full details of the Virtual Dynamics element to follow in a later release of the rules.

S7.2.12 The secondary task is to submit an LTS Vehicle Evaluation Report. This is a summary of your approach to the LTS Vehicle Evaluation section, giving an overview on your approach to testing, evaluating and deciding on the final vehicle model submission.

The report should summarise the testing you have completed and why, results of each of the different tests you have completed, and any relevant data analysis completed to justify decision makings. A clear understanding of vehicle dynamics theory with a logical thought process to explain the final powertrain, suspension, driver and other parameters were found is expected.

S7.2.13 The LTS Vehicle Evaluation Report must be a maximum of 1,500 words (including all title pages, contents, headings, captions, etc.) and is designed to be read in a maximum of 10

minutes. There is no page limit, but content exceeding 10 minutes to read will not be marked.

S7.2.14 The third task is to submit a Model Validation Test Plan report. It is to be treated as a high-level summary to be presented to your Chief Engineer, giving an overview of your proposed vehicle model validation process. This is independent from the LTS Vehicle Evaluation/model submission.

The report should detail the series of tests you intend to complete (at vehicle and sub-system/part level), including the instrumentation required to capture the necessary data, and how you intend to account for real world variability and environmental conditions when post-processing the experimental results.

S7.2.15 The Model Validation Test Plan must be a maximum of two (2) pages, in Arial font with a minimum size of 10pt. Cover sheets and tables of contents count as pages.

S7.2.16 Points for both the LTS Vehicle Evaluation Report and Model Validation Test Plan will be awarded for covering the expected topics, in a logical, clear and concise manner, with adequate engineering rationale and graded as per Table 9.

Grade	Grading Notes	FS Class	Concept Class
A+	Outstanding report. All expected topics are addressed comprehensively, with excellent engineering rationale, critical analysis and a logical, clear and concise presentation.	5 pts	10 pts
A	Excellent report. All expected topics are covered with sound engineering rationale. The report is logically structured, clear and concise, with only minor shortcomings.	4.5 pts	9 pts
B+	Very good report. Most topics are covered in good detail, with sound engineering rationale and clear presentation. Some minor omissions or weaknesses are evident.	4 pts	8 pts
B	Good report. The main topics are addressed, but some areas lack sufficient detail, engineering justification or clarity.	3.5 pts	7 pts
C+	Satisfactory report. A reasonable understanding of the subject is demonstrated, but several required topics lack depth, technical justification or adequate discussion.	3 pts	6 pts
C	Adequate report. Some relevant topics are addressed, but coverage is limited, engineering rationale is weak, or the report lacks sufficient structure and clarity.	2.5 pts	5 pts
D+	Poor report. Significant omissions and weaknesses in technical content, engineering rationale or presentation limit the overall quality.	2 pts	4 pts
D	Very poor report. Many required topics are inadequately addressed, with substantial weaknesses in technical understanding, justification and report structure.	1.5 pts	3 pts
E+	Extremely poor report. Only a small proportion of the required content is addressed, with major technical deficiencies and little supporting engineering rationale.	1 pts	2 pts
E	Extremely poor report. Very little of the required content is addressed, with significant technical errors, minimal engineering justification and inadequate report structure.	0.5 pts	1 pts

F	No assessable achievement. The report does not address any aspects of the brief, or no report is submitted.	0 pts	0 pts

Table 9: LTS Vehicle Evaluation Report and Model Validation Test Plan Scoring

S7.3 LTS Vehicle Evaluation Parameters

S7.3.1 Please see the "LTS Competition Documentation" for full details and limits for the tuneable parameters.

S7.3.2 All tuneable parameters must be set to values which are realistically achievable in a real-world scenario. This should be automatically restricted within the software; exploitation of any loopholes may result in disqualification from the LTS event. Any queries on the legality of a setting should be raised on the FSQD as per A3.6.

S7.3.3 The following parameters are available to tune:

DRIVER

Driver Aggression:	Five tuneable parameters, see User Documentation for details

SUSPENSION

Spring Rates:	Any linear rate
ARB Rates:	Any linear rate
Bump Stop Gap:	Any value within limited range
Rebound Spring Gap:	Any value within limited range
Damping Rates:	Any value within limited range
Kinematics:	5 configurations per axle with camber and toe options

BRAKE SYSTEM

Front Braking Torque	Fixed
Rear Braking Torque	Any value within limited range

VEHICLE DRIVELINE

Differential Type	Open, spool (locked) or torque sensing (three options, N/A for Four Motor EV)
Gear Ratios	Max 6 ratios, discrete ratio values not limited (Gasoline vehicles only)
Final Drive Ratio	Any value within limited range

SECTION D – DYNAMIC EVENTS

D1 DYNAMIC EVENTS GENERAL

The Dynamic Section Rules have been made in collaboration with the Motorsport UK Yearbook and are in compliance with their issued permit for the FSUK Event.

D1.1 Driver Limitations

D1.1.1 In total, a minimum of four and a maximum of six drivers are allowed for each team.

D1.1.2 An individual driver may not drive in more than two dynamic events.

D1.1.3 The endurance and efficiency event are considered a single event.

D1.2 Dynamic Area and Dynamic Vests

D1.2.1 The technical inspections and all dynamic events are held in the dynamic area.

D1.2.2 Four dynamic vests are handed out to each team by the officials and must be worn in the dynamic area.

D1.2.3 Only four members per team, including the driver, may enter the dynamic area at one time.

D1.2.4 Certain areas of the event, such as immediately prior to the start line for dynamic events, may only allow the driver in the car to enter. The marshals may grant permission for team members at their discretion to recover cars from such areas in the event that a car stalls or breaks down, however it is likely that no tools including auxiliary starter batteries may be used in this area.

D1.2.5 Drivers must not wear the dynamic vest when sitting in the vehicle. The driver's vest must not be attached to the vehicle or pushbar.

D1.2.6 The number of tools that may be used in this area is restricted to those which can be safely carried by the four team members in one trip.

D1.2.7 Engines may be run in the staging queue on the order of the officials.

D1.3 Dynamic Event Running

D1.3.1 While reasonable efforts will be made to ensure every qualifying team can complete at least one run of each dynamic event, this cannot be guaranteed and circumstances on the day may lead to events closing early. It is the team's responsibility to minimise any risk of this preventing them completing an event.

D2 DRIVING RULES

D2.1 Flags

D2.1.1 Flag signals are commands that must be obeyed immediately and without question.

D2.1.2 There will be no flag signs for vehicles in autonomous mode.

D2.1.3 GREEN FLAG –

- The session has started, the driver may enter the track under direction of the track marshals. In case of stalling, the vehicle can be restarted, but the driver has to await another green flag as the opening in traffic may have closed,
- The driver is clear to re-enter the track after using the slow lane to let a faster vehicle pass,
- The driver may pick up speed again after a yellow flag was displayed.

D2.1.4 YELLOW FLAG (Stationary) – Danger, the driver must slow down, something has happened beyond the flag station, no overtaking unless directed by the track marshals.

D2.1.5 YELLOW FLAG (Waved) – greater danger. The driver must be prepared to move off the track or stop due track blockage.

D2.1.6 RED AND YELLOW STRIPED FLAG – The track is slippery, or something is on the racing surface that should not be there. The driver must be prepared for evasive manoeuvres to avoid the situation.

D2.1.7 BLUE FLAG (and/or blue lights) – The driver must pull into the designated passing zone to be passed by a faster competitor. The driver must obey the track marshals' signals at the end of the passing zone.

D2.1.8 RED FLAG – The driver must come to an immediate safe and controlled stop on the track and must follow track marshals' directions.

D2.1.9 BLACK FLAG – the driver must pull into the driver change area, at the end of the lap when the flag is shown, for discussion. The time penalty is the discussion time with the Official, which may be re-assessed.

D2.1.10 BLACK FLAG WITH ORANGE DOT – Mechanical black flag. The driver must pull into the driver change area for a mechanical inspection of the vehicle, something has been observed that requires a closer inspection.

D2.1.11 CHECKERED FLAG – The session has been completed. The driver must exit the track at the first opportunity.

D2.1.12 There is no Last Lap Board/Flag for Endurance Event.

D2.2 Driving Under Power

D2.2.1 During driving, the mechanical integrity of the vehicle must be maintained.

D2.2.2 Vehicles must not be driven in reverse.

D2.2.3 The vehicle must be capable of always starting and restarting without external assistance/batteries.

D2.2.4 Push starts are prohibited.

D2.2.5 Vehicles may only be driven under power when running in a dynamic event, on the practice track and during brake test.

D2.2.6 Driving off-site is absolutely prohibited. Teams found to have driven their vehicle at an off-site location during the period of the competition will be excluded from the competition.

D2.2.7 Burnouts prior to and during the events are prohibited.

D2.2.8 When driving in autonomous mode, an ASR has to be present at the race control with the RES. Additionally, one single monitoring device (laptop, tablet, ...) may be brought (no complicated antenna construction or similar permitted).

D2.3 Ground Clearance

D2.3.1 Sliding skirts or other aerodynamic devices that by design, fabrication or as a consequence of moving, contact the track surface are prohibited. Any violation may be penalized by a mechanical black flag.

D2.4 Practice Track

D2.4.1 A practice track for testing and tuning vehicles (autonomous/manual mode) is available.

D2.4.2 To use the practice track, vehicles must have passed all technical inspections.

D2.4.3 Practice or testing at any location other than the practice track is absolutely forbidden.

D2.4.4 Failure to observe instructions from an official in the practice area may result in the driver's wristband being confiscated for the remainder of the event.

D2.5 Cones & Markings DV Running

D2.5.1 Details of the cones used, and more detailed track layout figures can be found in the competition handbook.

D2.6 Start-up Procedure DV Running

D2.6.1 No additional equipment (e.g. laptop, jack-up device, pressure tank, etc.) is allowed to start up the vehicle at the staging/starting line.

D2.6.2 If the vehicle does not enter "AS Ready" state within 1 min after being staged, the team may be sent back to the preparation area by the officials.

D2.6.3 The vehicle may only be staged with the steering system in straight position.

D2.6.4 The vehicle may be pushed from the preparation area to the start line with activated LVS.

D2.6.5 The ASB may be energized already in the preparation area.

D2.6.6 The ASMS may only be switched on by the ASR after approval from an official at the starting line.

D2.7 Vehicle Break Downs and Usage of RES during DV Running

D2.7.1 Stalling the engine or deactivating the TS for any reason during a dynamic event will result in Did Not Finish (DNF) as the autonomous system is not allowed to restart the engine/reactivate the TS.

D2.7.2 If a vehicle comes to standstill for any reason, it may have up to 30s to attempt to continue to drive. If the vehicle doesn't restart within 30s, it will be deactivated using the RES, deemed disabled and scored as DNF for the run.

D2.7.3 When the vehicle is driving in autonomous mode, one ASR must be present at the race control to operate the RES remote control.

D2.7.4 The ASR or the officials may stop the vehicle using the RES in any of the following cases:

- Its behaviour seems to be uncontrolled (e.g. driving off-course without visible intention to re-enter the track immediately),
- It is mechanically or electrically damaged,
- The average speed of the first three laps in trackdrive (after completing the third lap) is below 2.5m/s or the average speed of any of the following laps is below 3.5m/s,
- To ensure safe conditions on the track (e.g. persons or animals on the track). In this case the team will get a re-run.

D2.7.5 If a vehicle breaks down or is stopped by the use of the RES it will be removed from the track, will not be allowed to re-enter the track and scored DNF.

D2.7.6 If a traceable signal loss of the RES appears and doubtless proof can be brought by the team that it is was not self-inflicted, a re-run may be granted.

D2.7.7 At the direction of the officials, team members may be instructed to retrieve broken-down vehicles. This recovery may only be done under the control of the officials.

D2.8 Procedure After Completing an DV Dynamic Event

D2.8.1 The vehicle must be collected by the ASR and an additional team member immediately after approval from the officials.

D3 WEATHER CONDITIONS

D3.1 Operating Conditions

D3.1.1 The following track conditions are recognized:

- Dry,
- Damp,
- Wet.

D3.1.2 The operating conditions are decided by the officials and may change at any time.

D3.1.3 The current operating condition will be prominently displayed at the dynamic area.

D3.2 Tyres Allowed

D3.2.1 Teams must run the tyres allowed for each operating condition:

Operating Condition	Tyres allowed
Dry	Dry
Damp	Dry or Wet
Wet	Wet

D3.2.2 When the operating condition is damp, teams may change between dry tyres and wet tyres:

- Any time during the acceleration, skidpad, and autocross events.
- Any time before taking the green flag to start endurance and according to D7.6.

D3.2.3 If an event had varied operating conditions, the minimum performance levels to score points may be adjusted if deemed appropriate by the officials.

D3.2.4 Only one set of tyres per type (dry/wet) may be used during all the dynamic events. The brake test, practice area and the static events are excluded from this regulation.

D4 SKIDPAD EVENT

D4.1 Skidpad Track Layout

D4.1.1 The skidpad track consists of two pairs of concentric circles in a figure of eight pattern, as shown in Figure 8.

D4.1.2 The centres of these circles are 18.25m apart. The inner circles are 15.25m in diameter and the outer circles are 21.25m in diameter.

D4.1.3 16 cones are placed around the inside of each inner circle. 13 cones are positioned around the outside of each outer circle, in the pattern shown in the skidpad layout diagram.

D4.1.4 Each circle is marked with a line, outside the inner circle and inside the outer circle.

D4.1.5 The driving path is the 3m wide path between the inner and outer circles. The vehicles enter and exit through gates on a 3m wide path that is tangent to the circles where they meet.

D4.1.6 The line between the centres of the circles defines the start/finish line. A lap is defined as traveling around one of the circles, starting and ending at the start/finish line.

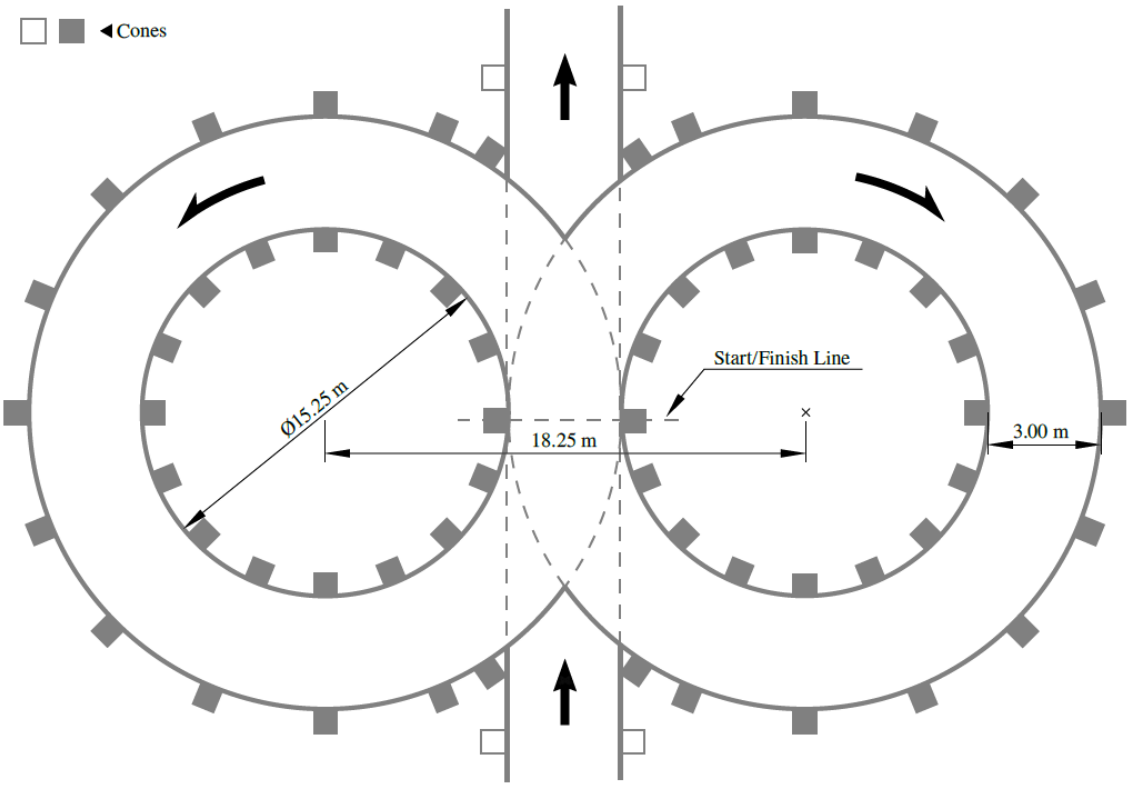

Figure 8: Skidpad Track Layout

D4.2 Manual Skidpad Procedure

D4.2.1 Each team has four initial runs, driven by two drivers with two runs each.

D4.2.2 Each driver has the option to make a second run immediately after their first run.

D4.2.3 Following completion of the four initial runs, both drivers can continue to run for an unlimited number of laps. Each additional lap will replace that driver's fastest previous lap time, excluding any penalties.

D4.2.4 The starting order is based on the time the team arrives at the skidpad event. Teams will be prioritised as follows:

- Teams on their first run.
- Teams on runs 2 to 4.
- Teams on run 5 onwards.

D4.2.5 Staging – The car will be staged before the timing line by a line or pair of cones, this will be between 15-20m approximately and subject to the available space to allow marshals to stand clear of the Skidpad.

D4.2.6 Starting - A green flag is used to indicate that the driver may start.

D4.2.7 The vehicle will enter perpendicular to the figure of eight and will take one full lap on the right circle to establish the turn. The next lap will be on the right circle and will be timed. Immediately following the second lap, the vehicle will enter the left circle for the third lap. The fourth lap will be on the left circle and will be timed. Immediately upon finishing the fourth lap, the vehicle will exit the track perpendicular to the figure of eight and moving in the same direction as entered.

D4.3 Driverless Skidpad Procedure

D4.3.1 Each team has two runs in autonomous mode.

D4.3.2 Starting order is based upon time of arrival. Teams on their first run will receive priority.

D4.3.3 Staging - The foremost part of the vehicle is staged 15m in front of the timekeeping line.

D4.3.4 Starting - A go-signal from RES is used to indicate the approval to begin.

D4.3.5 The vehicle will enter perpendicular to the figure eight and will take one full lap on the right circle to establish the turn. The next lap will be on the right circle and will be timed. Immediately following the second lap, the vehicle will enter the left circle for the third lap. The fourth lap will be on the left circle and will be timed. Immediately upon finishing the fourth lap, the vehicle will exit the track.

D4.3.6 The vehicle will exit at the intersection moving in the same direction as entered and must come to a full stop within 25 m behind the timekeeping line, inside the marked exit lane and enter the finish-state described in T14.8.

D4.4 Manual Skidpad Scoring

D4.4.1 The run time is the average time of the timed left and the timed right circle plus penalties which are added after the averaging.

D4.4.2 5 points are awarded to every team that finishes at least one run without DNF or DQ.

D4.4.3 If a team's best manual mode time including penalties is below T_{max}, additional points based on the following formula are given:

$$\text{M-}SKIDPADSCORE = 70\left(\frac{\left(\frac{T_{max}}{T_{team}}\right)^2 - 1}{\left(\frac{T_{max}}{T_{min}}\right)^2 - 1}\right)$$

- T_{team} is the team's best run time including penalties,
- T_{min} is the fastest vehicle run time including penalties,
- T_{max} is 125% of the fastest vehicle time including penalties.

D4.5 Driverless Skidpad Scoring

D4.5.1 Runs >25s will be DQ.

D4.5.2 If a team that finishes at least one driverless run without a DNF or DQ, points based on the following formula are given:

$$DV\ SKIDPAD\ SCORE = 75\left(\frac{N_{all} + 1 - R_{DV,team}}{N_{all}}\right)$$

- $R_{DV,team}$ is the ranking of team's best driverless time including penalties within the best driverless times including penalties of all other teams,
- N_{all} is the number of teams who finished at least one manual or driverless run without DNF or DQ

D5 ACCELERATION EVENT

D5.1 Acceleration Track Layout

D5.1.1 The acceleration track is a straight line with a length of 75m from starting line to finish line. The track is at least 3 m wide. Cones are placed along the track at intervals of about 5m.

D5.2 Manual Acceleration Procedure

D5.2.1 Each team has four initial runs, driven by two drivers with two runs each.

D5.2.2 Each driver has the option to make a second run immediately after their first run.

D5.2.3 Following completion of the four initial runs, both drivers can continue to run for an unlimited number of laps. Each additional lap will replace that driver's fastest previous lap time, excluding any penalties.

D5.2.4 Staging - The foremost part of the vehicle is staged 0.30m behind the starting line. Vehicles will accelerate from a standing start.

D5.2.5 Starting - A green flag is used to indicate that the driver may start. Timing starts after the vehicle crosses the starting line and stops after it crosses the finish line.

D5.2.6 The starting order is based on the time the team arrives at the acceleration event. Teams will be prioritised as follows:

- Teams on their first run.
- Teams on runs 2 to 4.
- Teams on run 5 onwards.

D5.2.7 The six (6) fastest cars in the heats qualify to compete in the "Top Six Runoff". The runoff will be run as an additional heat for the fastest driver from each qualifying team.

D5.2.8 The driver has one (1) run, this additional run does not count as competing in another dynamic event.

D5.2.9 The starting order will be reversed from the fastest times in the heats, i.e. the slowest team runs first, and the fastest team runs last.

D5.3 Driverless Acceleration Procedure

D5.3.1 Each team has two runs in autonomous mode.

D5.3.2 Staging - The foremost part of the vehicle is staged at 0.30m behind the starting line. Vehicles will accelerate from a standing start.

D5.3.3 Starting - A go-signal from RES is used to indicate the approval to begin, timing starts only after the vehicle crosses the starting line and stops after it crosses the finish line.

D5.3.4 After the finish line, the vehicle must come to a full stop within 50m inside the marked exit lane and enter the finish-state described in T14.8.

D5.3.5 Starting order is based upon time of arrival. Teams on their first run will receive priority.

D5.4 Manual Acceleration Scoring

D5.4.1 5 points are awarded to every team that finishes at least one manual mode run without a DNF or DQ.

D5.4.2 If a team's best manual mode time including penalties is below $T_{max,}$ additional points based on the following formula are given:

$$M_ACCELERATION\ SCORE = 65\left(\frac{\frac{T_{max}}{T_{team}} - 1}{\frac{T_{max}}{T_{min}} - 1}\right)$$

- T_{team} is the team's best time including penalties,
- T_{min} is the fastest vehicle time,
- T_{max} is 150% of the fastest vehicle time.

D5.4.3 The score for the Top Six Runoff is spread between zero (0) and five (5) based upon the elapsed time, additional points will be awarded as per the below:

Top Six Runoff Placing	Points
First	5
Second	4
Third	3
Fourth	2
Fifth	1
Sixth	0

Table 10: Acceleration run-off scoring

D5.5 Driverless Acceleration Scoring

D5.5.1 Runs >25s will be DQ.

D5.5.2 If a team that finishes at least one DV run without a DNF or DQ, points based on the following formula are given:

$$DV_ACCELERATION_SCORE = 75\left(\frac{N_{all} + 1 - R_{DV,team}}{N_{all}}\right)$$

- $R_{DV,team}$ is the ranking of team's best driverless time including penalties within the best driverless times including penalties of all other teams,
- N_{all} is the number of teams who finished at least one manual or driverless run without DNF or DQ.

D5.6 [DC ONLY] Driverless Cup Acceleration Scoring

D5.6.1 There are no extra runs for DV acceleration for the DC, however a separate formula is used to calculate the score for DC based on the DV runs.

D5.6.2 3.5 points are awarded to each team that finishes at least one DV run without a DNF/ DQ.

D5.6.3 If a team's best time including penalties is below $T_{max,}$ additional points based on the following formula are given:

$$DC\ ACCELERATION\ SCORE = 71.5\left(\frac{T_{max}}{T_{team}} - 1\right)$$

- T_{team} is the team's best DV time including penalties.
- T_{max} is 2 times the time of the fastest DV vehicle including penalties.

D6 AUTOCROSS EVENT

D6.1 Autocross Track Layout

D6.1.1 The autocross track layout is a handling track built to the following guidelines:

- Straights: No longer than 80m,
- Constant Turns: up to 50m diameter,
- Hairpin Turns: Minimum of 9m outside diameter (of the turn),
- Slaloms: Cones in a straight line with 7.5m to 12m spacing,
- Miscellaneous: Chicanes, multiple turns, decreasing radius turns, etc. The minimum track width is 3 m.

D6.1.2 The length of the autocross track is less than 1.5km.

D6.1.3 [DC ONLY] The autocross is using the same track as the trackdrive event (see D8.1).

D6.1.4 The organisers reserve the right to deviate from the parameters specified when they determine it is appropriate given the characteristics of the particular competition site.

D6.2 Autocross Procedure

D6.2.1 Each team has four initial runs, driven by two drivers with two runs each.

D6.2.2 Each driver has the option to make a second run immediately after their first run.

D6.2.3 Following completion of the four initial runs, both drivers can continue to run for an unlimited number of laps. Each additional lap will replace that driver's fastest previous lap time, excluding any penalties.

D6.2.4 Staging - The vehicle is staged at a staging line prior to the starting line. The staging line will be a minimum of 2m from the start line and a maximum of 6m, cars will be positioned on this line by the marshals.

D6.2.5 Starting - A green flag is used to indicate that the driver may start. Timing starts only after the vehicle crosses the starting line and stops after it crosses the finish line.

D6.2.6 The starting order is based on the time the team arrives at the autocross event. Teams will be prioritised as follows:

- Teams on their first run.
- Teams on runs 2 to 4.
- Teams on run 5 onwards.

D6.2.7 If a stalled or broken-down vehicle is blocking the track, then all other vehicles on track will be shown the red flag and allowed another run.

D6.3 [DC ONLY] Driverless Autocross Procedure

D6.3.1 There will be a track walk prior to the autocross. During the track walk no equipment (e.g. antennas, sensors, cameras, etc) other than analogue measurement devices (i.e. measurement wheel or measurement tape) is allowed.

D6.3.2 Using data collected in a previous run is not permitted for the autocross event.

D6.3.3 Each team has at least two runs consisting of one single lap. The final number of runs will be published before the start of the event.

D6.3.4 The starting order is based on the time the team arrives at the autocross event. Teams on their first run will receive priority.

D6.3.5 Staging - The vehicle is staged such that the front wheels are 6m in front of the starting line on the track.

D6.3.6 Starting - A go-signal from RES is used to indicate the approval to begin. Timing starts after the vehicle crosses the starting line.

D6.3.7 After the run, the vehicle must come to a full stop within 30m behind the finish line on the track and enter the finish-state described in T14.8.

D6.4 Autocross Scoring

D6.4.1 5 points are awarded to every team that finishes at least one run without DNF or DQ.

D6.4.2 If a team's corrected elapsed time is below $T_{max,}$ points based on the following formula are given:

$$AUTOCROSS\ SCORE = 95\left(\frac{\frac{T_{max}}{T_{team}} - 1}{\frac{T_{max}}{T_{min}} - 1}\right)$$

- T_{team} is the team's best time including penalties.
- T_{min} is the fastest vehicle time including penalties.
- T_{max} is 145% of the fastest vehicle time including penalties.

D6.5 [DC ONLY] Driverless Autocross Scoring

D6.5.1 10 points are awarded to every team that finishes at least one run without DNF or DQ.

D6.5.2 If a team's corrected elapsed time is below $T_{max,}$ points based on the following formula are given:

$$AUTOCROSS_SCORE_i = 90\left(\frac{T_{max} - T_{team,i}}{T_{max} - T_{min}}\right)$$

$$AUTOCROSS_SCORE_{total} = max\left(AUTOCROSS_SCORE_1, avg(AUTOCROSS_SCORE_1..AUTOCROSS_SCORE_n)\right)$$

- $T_{team,i}$ is the team's time including penalties of run i.
- T_{max} is the time for driving the lap with 4m/s.
- T_{min} is the fastest corrected elapsed time of all teams.

D7 ENDURANCE AND EFFICIENCY EVENT

D7.1 Endurance Track Layout

D7.1.1 The endurance track layout is a closed lap circuit built to the following guidelines:

- Straights: No longer than 80m
- Constant Turns: up to 50m diameter
- Hairpin Turns: Minimum of 9m outside diameter (of the turn)
- Slaloms: Cones in a straight line with 9m to 15m spacing
- Miscellaneous: Chicanes, multiple turns, decreasing radius turns, etc.
- The minimum track width is 3m

D7.1.2 The length of one lap of the endurance track is approximately 1km.

D7.1.3 The length of the complete endurance is approximately 22km.

D7.1.4 The organisers reserve the right to deviate from the parameters specified, when they determine it is appropriate given the characteristics of the particular competition site.

D7.2 Endurance Procedure

D7.2.1 Before entering the event, each CV's fuel tank must be filled to the fuel level line (see CV2.6.4, "Fuel Level Line") at the fuelling station. During fuelling, once filled to the scribe line, no shaking or tilting of the tank, the fuel system or the entire vehicle is allowed.

D7.2.2 There is only one run for the endurance event.

D7.2.3 A driver change must be made at the midpoint of the run.

D7.2.4 Staging - The vehicle is staged at a staging line prior to the starting line. If the vehicle is unable to proceed across the timing line from the staging line due to a vehicle issue, then a DNS (Did Not Start) will be applied, it has failed the endurance event and will not be allowed to be repaired and re-start

D7.2.5 Starting - A green flag is used to indicate that the driver may start. Timing starts only after the vehicle crosses the starting line.

D7.2.6 The first driver will drive for 11km and will then be signalled into the driver change area.

D7.2.7 After the driver change specified in D7.5, the second driver will drive for an additional 11km and will be signalled to exit the track after crossing the finish line.

D7.2.8 After leaving the track, the vehicle must be powered down.

D7.2.9 For CV, the second driver will proceed directly to the fuelling station. The tank will be filled to the refill mark and the amount of fuel will be recorded.

D7.3 Endurance Running Order

D7.3.1 The running order for the endurance will be established in a way that vehicles with similar speeds shall be on the track together.

D7.3.2 The running order will be published at Event Control.

D7.4 Passing

D7.4.1 During the endurance event, overtaking is only permissible in the designated passing zones and under the control of the track marshals.

D7.4.2 Passing zones have two parallel lanes, a slow lane only used by the vehicles that are being overtaken and a fast lane for the vehicles that are overtaking.

D7.4.3 Passing zones may be situated on either the left or right of the fast lane.

D7.4.4 The passing zone procedure will be as follows:

- A slower leading vehicle will be shown the blue flag and must drive into the slow lane and decelerate,
- The following faster vehicle will continue in the fast lane to pass the slow vehicle,
- The vehicle that has been overtaken may re-enter the track when the track marshal who is in charge of that passing zone is showing the green flag.

D7.4.5 The passing rules do not apply to vehicles that are stopped on track or vehicles that have spun out and are not moving. When passing a stationary vehicle, it is critical to slow down, drive cautiously and to follow the instructions from the track marshals.

D7.5 Endurance Driver Change Procedure

D7.5.1 Only three team members including the driver may enter the driver change area. They may only bring the tools required to adjust the vehicle to accommodate the second driver and/or change tyres.

D7.5.2 For electric vehicles one of the team members must be an ESO.

D7.5.3 During the driver change, the team may:

- perform changes to accommodate the second driver,
- operate the master switch(es),
- change tyres as per D7.6.

No other work may be performed during the driver change, external jumper batteries may not be used to restart the car

D7.5.4 Each team is given three minutes to change their driver and one minute to restart the car.

D7.5.5 The driver change time will start once the vehicle is stopped in the driver change area and the first driver has turned off the engine for CV or turned off the tractive system for EVs.

D7.5.6 [EV ONLY] The TSMS must be switched off by the ESO and the TSAL must have changed to green colour, before anyone is allowed to touch the vehicle or to climb out the vehicle.

D7.5.7 The first driver will climb out the vehicle and any necessary adjustments will be made to the vehicle to fit the second driver (seat cushions, head restraint, pedal position, etc.). The second driver will then be secured in the vehicle.

D7.5.8 When the second driver is fully secured in the vehicle, the driver change time ends. Marshalls will check that the driver is securely fastened into the vehicle and complies with all regulations.

D7.5.9 The driver will be given the signal to start the engine/tractive system. The moment the signal is given, the driver is given one minute to restart the car.

D7.5.10 Once the vehicle has restarted and is ready-to-drive again, the restart time is stopped.

D7.5.11 If the driver change and vehicle starting takes longer than three minutes and one minute, respectively, the extra time is included in the final time.

D7.6 Endurance Event Tyre Changes

D7.6.1 All tyre changes after a vehicle has received the green flag to start the endurance event must take place in the driver change area.

D7.6.2 If the operating condition changes to wet during endurance, the track will be red flagged, and all vehicles brought into the driver change area.

D7.6.3 If a team wants to change tyres, the officials must be informed beforehand.

D7.6.4 In some cases, tyre changes can be carried out directly after the driver change, for others the team must make an extra stop.

D7.6.5 The allowed tyre changes and associated conditions are given in the following tables.

Existing Operating Condition	Currently running on	Condition changes to Dry	Condition changes to Damp	Condition changes to Wet
Dry	Dry Tyres	–	A	B
Damp	Dry Tyres	–	A	B
Damp	Wet Tyres	C	C	–
Wet	Wet Tyres	C	C	–

	Requirement	Allowed at Driver Change?	Time Allowed
A	may change from dry to wet	yes	Note 1
B	must change from dry to wet	yes	Note 1
C	may change from wet to dry	no	Note 2

Table 11: Allowed tyre changes

Note 1: Any time in excess of ten minutes without driver change, or thirteen minutes with driver change, is added to the team's total time for endurance.

Note 2: The time used to change to dry tyres is added to the team's total time for endurance.

D7.6.6 Teams that have incurred a puncture during the endurance event due to external factors (e.g. debris on track) may change the tyre with no time penalty, if the vehicle reaches the driver change area under its own power without external assistance.

D7.6.7 The wheel will be inspected by the officials. If the deflation was not caused by external factors, the vehicle will be scored DNF.

D7.6.8 Deflation caused by running off-course or impacting barriers or other objects due to driver error will not be regarded as external factors.

D7.6.9 If a vehicle is unable to maintain lap times within one hundred forty-five percent (145%) of the fastest lap time for the course, then it must exit immediately.

D7.6.10 Disqualification for failure to maintain the minimum speed will be made at the discretion of the Dynamic Event Captain / Clerk of the Course.

D7.7 Endurance Specific Regulations

D7.7.1 Teams are prohibited from working on or fuelling their vehicles during the run.

D7.7.2 Wheel-to-wheel racing is prohibited.

D7.7.3 Passing another vehicle must be completed as per D7.4.

D7.7.4 If a vehicle stops on track, it is allowed one minute to restart.

D7.7.5 If a vehicle has a restart problem at the driver change or after a red flag, it is allowed two minutes to restart the engine, enable the tractive system or to enter R2D. The two minutes start from the time the driver first tries to restart. The time is counted towards the endurance time.

D7.7.6 If restarts are not accomplished within the above times, the vehicle is scored as DNF for the run.

D7.7.7 If a vehicle breaks down, it will be removed from the track and will not be allowed to re-enter the track.

D7.7.8 Team members may be instructed by the officials to retrieve broken down vehicles. This recovery may only be carried out under the control of the officials.

D7.8 Endurance Scoring

D7.8.1 Each lap of the endurance event is individually timed. The corrected elapsed time is determined by subtracting the extra-long lap for the driver change from the total time and adding any penalty times.

D7.8.2 The post event technical inspection (see IN12) must be passed to score points in the endurance event.

D7.8.3 25 points are awarded to every team that finishes endurance without DNF or DQ.

D7.8.4 If a team's corrected elapsed time is below T_{max}, additional points based on the following formula are given:

$$ENDURANCE\ SCORE = 225\left(\frac{\frac{T_{max}}{T_{team}} - 1}{\frac{T_{max}}{T_{min}} - 1}\right)$$

- T_{team} is the team's best time including penalties.
- T_{min} is the fastest vehicle time including penalties.
- T_{max} is 145% of the fastest vehicle time including penalties.

D7.8.5 If a team DNFs then:

$$ENDURANCE\ SCORE = \text{Number of Laps Completed}$$

D7.8.6 It a driver's run is interrupted by a red flag, the recorded lap time for their red-flagged lap will be replaced by the average lap time from their preceding laps. The number of laps used for the averaging will be at the discretion of the Dynamic Event Captain.

D7.9 Efficiency Scoring

D7.9.1 The Efficiency is based on a metric of the amount of fuel consumed or energy used and the lap time on the endurance course, averaged over the length of the event. Teams are advised that the Efficiency score is based only on the distance cars run on the course during the Endurance event. Although the starting line, exit line and the driver change zone increase the actual distance a car must drive during the event, those distances are not factored into the fuel calculations. Additionally, fuel consumption adjustments will not be made for engine running in the entry/exit lines, during driver change, in the penalty box or for any on-course incidents. The Organisers may use either the corrected Endurance lap times or the scored Endurance lap times for the Efficiency event.

D7.9.2 The mass of CO2 released to the atmosphere will be assessed by using the conversion factors below from quantity of fuel used to CO2 released. The factors are intended to represent the average supply of the appropriate commodity and the Organisers will not take account of where the actual fuel used came from.

Fuel Type	Conversion Factor
E10 gasoline	799g CO_2 per litre
Electric	143g CO_2 per kWh
E85	571g CO_2 per litre

Table 12: Fuel Conversion Factors

The conversion factor for Alternative Fuels will be determined by the organisers upon receipt and review of the Alternative Fuel Report.

D7.9.3 Full credit will be given for energy recovered through regenerative braking.

D7.9.4 Efficiency will be scored using the following formulas:

$$EFFICIENCY\ SCORE = 100\frac{(Efficiency\ Factor_{min}/Efficiency\ Factor_{team}) - 1}{(Efficiency\ Factor_{min}/Efficiency\ Factor_{max}) - 1}$$

Where:

$$EFFICIENCY\ FACTOR = \frac{T_{min}/LapTotal_{Tmin}}{T_{team}/Laps_{team}} * \frac{CO_{2_{min}}/LapTotal_{CO2min}}{CO_{2_{team}}/Laps_{team}}$$

- CO_{2min} is the smallest mass of CO_2 used by any competitor whose endurance time T_{team} is less than 145% of the average lap time of the fastest team that completes the endurance event.
- CO_{2team} is the mass of CO_2 used by the team being scored.

- T_{min} is the lowest Endurance time of the fastest team whose fuel consumption does not exceed 26 litres/100km or energy equivalent of 20 $kgCO_2$/100km.
- T_{team} is the combined Endurance times of the drivers in your heat.
- $Laps_{team}$ is the number of laps driven by the team being scored.
- $LapTotal_{Tmin}$ and $LapTotal_{CO2min}$ are the number of laps completed by the teams which set T_{min} and CO_{2min} respectively.
- $EfficiencyFactor_{min}$ is calculated using CO_{2team} equivalent to 20 $kgCO_2$/100km and T_{team} set to 145% of the average laptime of the fastest team that completes the Endurance event.

D7.9.5 Vehicles whose average Endurance lap time exceeds 1.45 times the average Endurance lap time of the fastest team that completes the Endurance event, will receive zero (0) points for efficiency.

D7.9.6 Vehicles whose corrected average fuel consumption per lap exceeds 26 litres/100 km or energy equivalent of 20 $kgCO_2$/100 km, will receive zero (0) points for Efficiency.

D7.9.7 The minimum Efficiency Factor is determined from the maximum allowable CO_2/100km and 145% of the corrected average Endurance lap time of the fastest team that completes the Endurance event.

D7.9.8 Efficiency scores can range from zero points (0) to positive one hundred (100) points.

D7.9.9 Vehicles which cross the start line following driver change are eligible for Efficiency points. Other vehicles will receive a score of zero points (0) for Efficiency.

D7.9.10 Should the fuel level change after refuelling due to effects such as described in CV2.7.1 then the difference in fuel level will be measured and twice the amount will be added to the official fuel consumption figure.

D8 [DV ONLY] TRACKDRIVE EVENT

D8.1 Trackdrive Tracklayout

D8.1.1 The trackdrive layout is a closed loop circuit built to the following guidelines:

- Straights: No longer than 80m,
- Constant Turns: up to 50m diameter,
- Hairpin Turns: Minimum of 9m outside diameter (of the turn),
- Miscellaneous: Chicanes, multiple turns, decreasing radius turns, etc,
- The minimum track width is 3m.

D8.1.2 The length of one lap is approximately 200m to 500m.

D8.2 Trackdrive Procedure

D8.2.1 Starting order may be defined by the officials, based on previous dynamic event results.

D8.2.2 Before starting a run, each vehicle with a fuel tank (CV), must be filled to the fuel level line (see CV2.6.4, "Fuel Level Line") at the fuelling station. During fuelling, once filled to the scribe line, no shaking or tilting of the tank, the fuel system or the entire vehicle is allowed.

D8.2.3 There will be a maximum of two runs, each run consisting of ten laps. The number of runs and the starting order procedure will be announced before the start of the event.

D8.2.4 Staging - The vehicle is staged such that the front wheels are 6 m in front of the starting line on the track.

D8.2.5 Starting - A go-signal from RES is used to indicate the approval to begin. Timing starts after the vehicle crosses the starting line.

D8.2.6 After ten laps the vehicle must come to a full stop within 30m behind the finish line on the track and enter the finish-state described in T14.8.

D8.2.7 There will be no last lap signal i.e. the vehicle should count laps itself.

D8.2.8 The team must proceed directly to the fuelling station (vehicles with internal combustion engine only).

D8.3 Trackdrive Scoring

D8.3.1 If there is more than one run per vehicle, the run with the highest score of trackdrive is scored.

D8.3.2 T_{max} and T_{min} for the trackdrive score is calculated based on all valid runs.

D8.3.3 Each lap of the trackdrive event is individually timed. The corrected elapsed time is determined by adding any penalty times.

D8.3.4 If a team's corrected elapsed time is below T_{max} and the run was not DNF or DQ, points based on the following formula are given:

$$TRACKDRIVE_SCORE = 150\left(\frac{T_{max}}{T_{min}}\right)$$

- T_{team} is the team's corrected elapsed time.
- T_{max} is 2 times of the corrected elapsed time of the fastest vehicle over all runs.

D8.3.5 An additional five points are awarded for every completed lap, independent of the corrected elapsed time. This is also applied for teams that do not finish the trackdrive i.e. get a DNF.

D9 DYNAMIC EVENTS PENALTIES

D9.1 General Penalties

D9.1.1 Penalties will not be assessed for accident avoidance or other reasons deemed sufficient by the officials.

D9.1.2 A cone is Down or Out (DOO) if the cone has been knocked over or the entire base of the cone lies outside the box marked around the cone in its undisturbed position.

D9.1.3 Cones that are DOO are not replaced/reset during a DV run. There will be no re-run due to cones in the driving path or disorientation due to missing cones.

D9.1.4 The DOO penalty (see D9.1.7) is added for each DOO including entry and exit gate cones before the start and after the finish line, which occur on that particular run.

D9.1.5 Off-course (OC)

- An OC occurs when the vehicle has all four wheels outside the track boundary as indicated by edge marking,
- Missing one or more gates of a given slalom at autocross or endurance is counted as one OC per occurrence,
- When an OC occurs, the driver must re-enter the track at the next possible point,
- When re-entering the driver needs to wait for a gap and follow the instructions of the track marshals.

D9.1.6 An Unsafe Stop (USS) is defined as not stopping within the specified area and/or not entering the finish-state described in T14.8 within 30 seconds during autonomous running.

D9.1.7

	Acceleration	Skidpad	Autocross	Endurance	Trackdrive
DOO	2s	0.2s	2s	2s	2s
OC	DNF	DNF	10s	10s	10s
USS	DNF	DNF	DNF	N/A	−50 points

Table 13: Dynamic event penalties

D9.1.8 DNF equals zero points for that run.

D9.1.9 DQ equals zero points for that run.

D9.1.10 If a team Did Not Attempt (DNA) an event the score is zero points.

D9.1.11 Each run with an incorrect number of laps at skidpad is classified as DNF.

D9.1.12 Failure to obey a marshal or a flag: one minute time penalty.

D9.1.13 Reckless or aggressive driving or “Over Driving”: Black Flag (see D2.1.9), additional time penalties (up to a maximum of five minutes) may also be applied. If the driver continues to drive recklessly or aggressively after being black flagged, they may be DQ’d.

D9.1.14 Vehicle to vehicle contact: Two minutes up to disqualification depending on the nature of the incident.

D9.1.15 If a vehicle stops and cannot restart without external assistance, the vehicle is DNF for that run.

D9.1.16 If a vehicle is not able to start the run, after being called to the staging/starting line, the vehicle is DQ for that run.

D9.2 Endurance Penalties

D9.2.1 Teams that are running out-of-order as defined in the competition handbook, are penalized by two minutes and may then run at the discretion of the officials.

D9.2.2 Mechanical Problem: The time taken for mechanical inspection under a "mechanical black flag" (see D2.1.10) is considered officials' time and is not included in the team's total time. If the inspection reveals a mechanical integrity problem the vehicle is scored DNF.

D9.2.3 If it is impossible to impose a penalty by a stop under a black flag, e.g. not enough laps left, the officials may add an appropriate time penalty to the team's elapsed time.

D9.2.4 A team may receive a DNF if their vehicle is too slow or being driven without proper control.

D9.2.5 Any violation to the procedure of driver change (D7.5.3) will lead to a time penalty of up to two minutes.

D9.3 [CV ONLY] Efficiency Penalties

D9.3.1 Should the fuel level change after refuelling due to effects such as described in CV2.7.1, then the difference in fuel level will be measured and twice the amount will be added to the official fuel consumption figure.

D9.4 [EV ONLY] Power and Voltage Violation Penalties

D9.4.1 A violation is defined as using more than the maximum power, see EV2.2, or exceeding the specified voltage, see EV4.1.1, after a moving average over 500ms is applied to the respective Energy Meter signal, see EV4.6.

D9.4.2 Each violation is a DQ for the fastest run of the event. If a violation occurred during two runs, the two fastest runs will be DQ etc.

D9.4.3 The respective data and the resulting decision of violations may be made public.

D9.4.4 Non-availability of Energy Meter data will be treated as a violation.

SECTION FC – FUTURE CHANGES

FC1 FUTURE RULE CHANGES

FC1.1 General

FC1.1.1 This section contains rules proposed to be introduced in the 2028 rules and will be updated in a later release of the 2027 rules.